ELEMENTARY CHEMICAL MICROSCOPY

BY

ÉMILE MONNIN CHAMOT, B. S., Ph. D.
Professor of Sanitary Chemistry and Toxicology, Cornell University

FIRST EDITION
THIRD THOUSAND

NEW YORK
JOHN WILEY & SONS, Inc.
London: CHAPMAN & HALL, Limited
1916

Copyright, 1915,
by
ÉMILE MONNIN CHAMOT

Stanhope Press
F. H. GILSON COMPANY
BOSTON, U.S.A.

PREFACE.

The American chemist, usually ready to accept with alacrity all time, labor and money saving devices, has been strangely backward in taking advantage of the benefits to be gained through the intelligent application of chemical microscopic methods in the industries and in research. He has also failed to grasp the fact that the modern microscope is, in reality, a more important adjunct to his laboratory than spectrometer, polarimeter or refractometer; in fact, it may be said that the microscope is entitled to as important a place as the analytical balance. No one other instrument can perform so many functions and do them all well.

This curious reluctance to grasp the opportunities offered is the more extraordinary, when we recall that the earliest comprehensive work dealing with microchemical methods was from the pen of an American — Theodore G. Wormley — whose classic "The Microchemistry of Poisons" appeared in 1867.

The failure of the chemists to obtain from the microscope all that the instrument is capable of yielding is, perhaps, largely due, first, to the fact that few of them are given an opportunity of becoming sufficiently familiar with the instrument and its accessories; second, they are not aware of the great variety of problems which are solvable through the microscope, nor of the specific sort of problems for the investigation of which this is *the* instrument *par excellence;* third, there has been a lack of elementary manuals covering the field, and for this reason the microscope has been looked upon as an instrument peculiar to the biological laboratory.

One application, if no other, should appeal to every chemist, that of microscopic qualitative analysis, because of its enormous saving of time, labor, material and space, yet with increased sensitiveness of tests and greater certainty of results.

The very apparent need of including a course in the manipulation and applications of the microscope in the curriculum of students of chemistry led to the establishment, by the author, of laboratory courses in chemical microscopy some fifteen years ago. These courses have comprised informal lectures, demonstrations and laboratory practices. The students have been guided by their notes and by mimeographed and typewritten sheets. With the growth of the courses in number of students, apparatus and laboratory equipment, some more permanent and comprehensive outline has become imperative. The result has been the preparation of the present little book. The author has intended it primarily for his students in elementary chemical microscopy and as a basis for more advanced work in specific fields, but he hopes that the gathering together of methods and apparatus may prove of value to American chemists at large and perhaps serve to arouse in some an interest in one of the most fascinating branches of chemical science.

The actual nucleus about which the various parts of the book have grown is a series of some twenty articles written by the author between the years 1899 and 1902 for the *Journal of Applied Microscopy*, dealing with methods of microchemical analysis; to this foundation have been added the laboratory direction sheets and the substance of the lectures delivered.

Until the year 1911, when Emich's excellent little *Lehrbuch der Mikrochemie* appeared, there was not in existence any work embodying the broad applications of the microscope to the solving of problems such as arise in the chemical laboratory. So far as the writer is aware this is the only book touching this field. The topics presented by Emich are substantially those which have been covered in the author's courses with the exception that more weight is placed upon analytical methods and less upon apparatus. The present writer therefore feels that there is still room for an outline of Chemical Microscopy proper.

It is assumed that the students for whom this textbook is intended have had a course in crystallography and one in physics, including optics. Therefore, only a mere statement of fundamental facts has been thought essential, that is, only so much

as is necessary to recall knowledge already acquired but not yet applied in practice.

In discussing the polarizing microscope, only the barest possible outline of its use and application has been thought wise. This chapter is intended to be largely suggestive in character and to induce at least some students to extend their studies to include optical crystallography and petrography.

In the chapter dealing with grinding, polishing and etching, it was found impossible to properly present the subject without unduly enlarging the book and encroaching too deeply into the field of microscopic metallurgy; only the most fundamental methods of alloy treatment have therefore been given.

The instruments figured (and the methods described) have all been tested and tried by the author with but one or two exceptions. The instruments are those with which the Cornell University Laboratories are supplied or those which have kindly been loaned by their makers. Doubtless there are other pieces of apparatus and other instruments which may be as satisfactory, but it has been thought best to discuss only such as have actually been examined and tested experimentally by the author and his students.

For the benefit of those who may wish to obtain similar instruments the manufacturers have in most cases been indicated.

In preparing such an outline the work of an author must of necessity be largely one of compilation, of modification of old methods and the presentation of old ideas from a new viewpoint. The present writer, therefore, makes no claims for originality, and as a student of that remarkable teacher, the late Professor Behrens of the Polytechnic School of Delft, he naturally has followed and favored the methods developed by this master of the art of the qualitative analysis of minute quantities of material and he acknowledges fully his indebtedness to his former teacher, and takes this opportunity of expressing his gratitude for the advice and help given him by his guide and friend.

To Simon Henry Gage, Professor Emeritus of Histology and Embryology, the writer also acknowledges his indebtedness for much that is here presented. It is largely due to the spirit of

optimism and love for research with which this indefatigable investigator is ever surrounded that the author was originally led to enter the field of applied microscopy when first a student.

To Professor Louis Munroe Dennis, Head of the Department of Chemistry of Cornell University, the writer is even more indebted in later years for his unflagging enthusiasm and confidence in the possibilities of a neglected field. Without his encouragement and support, the development of laboratories and equipment would have been impossible and the preparation of this little book impracticable.

The author also wishes to express his indebtedness to Dr. E. Macé of the University of Nancy, France, and to colleagues in the Cornell University departments of chemistry, physics, and mineralogy for valuable advice and suggestions. His thanks are also due to his assistants Dr. C. M. Sherwood and Mr. H. I. Cole for reading manuscript and testing methods.

E. M. C.

ITHACA, N. Y., *June*, 1914.

CONTENTS.

Optics of the Compound Microscope . . . . *Frontispiece*

CHAPTER I.

Objectives and Oculars.

	Page
Function of the objective	1
Designation of objectives	1
Working distance of objectives	2
Different kinds of objectives	2
The draw-tube	4
Angular aperture of objectives	4
Numerical aperture of objectives	5
Immersion objectives	5
Variable objectives	6
Resolving power	6
Illuminating power	8
Penetrating power	8
Selecting objectives	8
Care of objectives	9
Function of oculars	11
Negative and positive oculars	11
Eye-point	12
Different types of oculars	13
Care of oculars	14
Limit of magnification	15

CHAPTER II.

Microscopes for Use in Chemical Laboratories.

Specifications for chemical microscopes	17
Microscopes for general chemical microscopy	19
Large stage microscopes	22
Comparison oculars	23
Comparison microscopes	25
Hot stage microscopes	28

CHAPTER III.

Illumination of Objects; Illuminating Devices.

	Page
Different modes of illumination	30
Transmitted light	30
Condensers, Abbe condensers	32
Reflected light	37
Dark-ground illumination	40
Dark-ground illuminators	41
Objectives for use with dark-ground illuminators	43
Resolving power with dark-ground illuminators	44
Adjustment of dark-ground illuminators	46
Orthogonal illumination	50
Differential color illumination	51
Ultraviolet ray illumination	51
Fluorescence microscope	52

CHAPTER IV.

Ultramicroscopes; Apparatus for the Study of Ultramicroscopic Particles.

The principle of the ultramicroscope	54
Brownian motion	55
The diffraction images of ultramicroscopic particles	55
The slit ultramicroscope and its adjustment	57
Reflecting condenser ultramicroscopes	65
The cardioid ultramicroscope	67
The reflecting prism ultramicroscope of Cotton and Mouton	69
The Jentzsch reflecting condenser	71
The immersion ultramicroscope	72

CHAPTER V.

The Examination of Opaque Objects; Vertical Illuminators; Metallurgical Microscopes.

Simple vertical illuminators	76
Adjustment of vertical illuminators	78
Interpretation of appearances	80
Special forms of vertical illuminators	81
Maintaining the alignment of illuminator and radiant	87
Mounting polished specimens for study	89
Metallurgical microscopes, metallographs	90
Shop or Works microscopes	99

CHAPTER VI.

USEFUL MICROSCOPE ACCESSORIES; LABORATORY EQUIPMENT; WORK TABLES; RADIANTS.

	PAGE
Drawing cameras	102
Drawing eyepieces	105
Microspectroscopes	106
Calibration of microspectroscopes	110
Mechanical stages	113
Rotating and orientating devices	115
Lens holders	118
Reagent containers	119
Rods, platinum wires, pipettes	121
Spatulas	122
Forceps	122
Object slides	123
Watch glasses and evaporators	126
Burners for microchemistry investigations	126
Tongs	129
Work tables	129
Radiants	132
Nosepieces and objective changers	137
Sedimentation glasses	139
The microscope as a polarimeter	139

CHAPTER VII.

MICROMETRY; MICROMETRIC MICROSCOPES.

Different methods of measuring microscopical objects	142
Methods of direct comparison	143
Micrometric microscopes	144
Micrometry with a camera lucida	147
Determining the magnifying power of a microscope	148
Micrometry by means of micrometer oculars	149
Determination of the ocular micrometer ratio	150
Step micrometers	153
Contrast micrometers	154
Filar micrometers	154
Micrometry by means of a scale projected by the Abbe condenser	155
Use of the micrometer fine adjustment	157
Measurements of thickness	158

CHAPTER VIII.

Polarized Light; the Simple Polarizing Microscope; Crystals under the Microscope.

	Page
Polarized light, its properties and applications	159
Isotropic and anisotropic substances	159
The Nicol prism	160
Polarizers and analyzers	162
Testing the adjustments of the polarizing microscope	163
Centering the rotating stage	164
Polarized light without a Nicol prism	166
Fundamental principles of crystallography	167
Elements of optical crystallography	170
Directions or axes of vibration of crystals	172
Use of converging polarized light	173
Polarization colors	174
The selenite plate	175
Absorption of light, pleochroism	176
Measurement of angles and of extinction angles	177
Characteristics of the six crystal systems	180
Experiments with crystals	182

CHAPTER IX.

The Determination of Refractive Index by Means of the Microscope.

The relation between refractive index and contour bands	184
Principle of the immersion method	185
Behavior of air bubbles and oil globules	186
Half-shadow method of illumination	188
Calculating refractive indices of mixtures of liquids	191
Refractive index of anisotropic crystals	193
Uniaxial and biaxial crystals	193
Determination of the refractive index of liquids	196
Determination of thickness by refractive index	200
Liquids for use in the immersion method	201
Crystals for use in the immersion method	203
Refractive indices of typical crystals	204

CHAPTER X.

Quantitative Analysis by Means of the Microscope.

Methods available	205
Analysis of powdered material	206
Net ruled oculars and their uses	208

PAGE
Counting cells ... 210
Determination of weight by micrometry ... 212
Volume and weight per cents; area measurements ... 216
Estimation of molecular weight ... 216

CHAPTER XI.

THE DETERMINATION OF MELTING AND SUBLIMING POINTS.

Approximate methods ... 220
Exact methods ... 222
Hot stages ... 224
Subliming points ... 227

CHAPTER XII.

METHODS FOR HANDLING SMALL AMOUNTS OF MATERIAL.

Testing for solubility ... 228
Decantation ... 230
The centrifuge ... 233
Filtration ... 238
Sublimation ... 240
Distillation ... 244
Ignition, fusion ... 248
Grinding and mixing ... 249

CHAPTER XIII.

THE METHODS OF MICROCHEMICAL QUALITATIVE ANALYSIS.

The various ways in which reagents are applied ... 250
Preparation of special reagents ... 271

CHAPTER XIV.

CHARACTERISTIC MICROCHEMICAL REACTIONS OF THE COMMON ELEMENTS AND ACIDS WHEN IN SIMPLE MIXTURES.

CATIONS:
Sodium ... 273
Potassium ... 281
Ammonium ... 285
Calcium ... 287
Strontium ... 292
Barium ... 295

	Page
Calcium, strontium and barium, additional tests	300
Magnesium	304
Zinc	307
Cadmium	316
Mercury	318
Lead	323
Silver	330
Copper	339
Aluminum	341
Tin	346
Arsenic	348
Antimony	351
Bismuth	354
Chromium	356
Manganese	359
Iron	362
Nickel	363
Cobalt	365
Testing for cations in simple salts	367
Anions:	
Testing for anions in simple salts	368
Group reactions of the anions	369
Acetates	374
Arsenates	374
Arsenites	374
Borates	375
Bromides	375
Carbonates	375
Chlorides	376
Chlorates	376
Chromates, bichromates	376
Cyanides	376
Cyanates	377
Ferricyanides	377
Ferrocyanides	378
Iodates	378
Iodides	378
Nitrates	378
Nitrites	379
Oxalates	379
Phosphates	380
Silicates	380
Sulphates	380
Sulphites, thiosulphates	381
Sulphides	381
Sulphocyanates	381
Tartrates	381

CHAPTER XV.

Preparing Opaque Objects for the Microscopic Study of Internal Structure.

	Page
Fundamental principles	383
Grinding; abrasive wheels	384
Grade and grain of abrasive wheels	385
Selecting wheels	386
Speed of rotating wheels	387
Abrasive papers	388
Preparing specimens	389
Etching	391
Etching liquids	392

APPENDIX.

Table of melting points	395
Periodic classification of the elements	396
Books for reference	397
Index	399

ELEMENTARY CHEMICAL MICROSCOPY.

CHAPTER I.

OBJECTIVES AND OCULARS.

The modern compound microscope, in any one of its many complicated forms employed by chemists, consists essentially of three parts, (1) an objective, (2) an eyepiece or ocular and (3) a device for properly illuminating the object. The manner in which these three essential components are mechanically mounted, and their relative importance with respect to each other will depend upon the nature of the investigation to which the instrument is to be specifically applied. The mechanical parts of the microscope can therefore be best discussed under the different types of microscopes applied to special investigations.

The optical components, however, need a few words in order that the student may refresh his memory relative to the optics involved.

Objectives have as their function the formation of an enlarged real image of the object placed upon the stage of the microscope. From the viewpoint of the chemist, their construction should be such as to keep them as far above the object as possible, yet yield an image of as great an area of the object as can be obtained without distortion and without color bands or fringes. In addition, they should possess considerable depth of focus.

Objectives are commonly designated by their equivalent focal length, as, for example, 1 inch, 32 millimeters, etc., the numbers indicating that the objective will produce a real image of approximately the same size as that produced by a simple convex lens

whose principal focus lies at the distance marked upon the objective.

In a similarly constructed series, the smaller the value of the equivalent focus, the greater will be the magnifying power of the objective. A few manufacturers still arbitrarily letter or number their objectives. In such cases it is generally the rule that the earlier in the alphabet the letter or the smaller the number in the series the lower the magnifying power.

When properly focused upon a preparation, the front or lowest lens entering into the construction of an objective is usually nearer to the preparation (in dry objectives) than the distance indicated by the equivalent focus. This distance between the front combination of the objective and the preparation, when in focus, is known as the *working distance* of an objective. In their selection for use in microchemical analysis the working distance becomes one of the most important considerations affecting the choice of the objectives.

The construction of typical microscope objectives is shown diagrammatically in Figs. 17, 18 and 19, page 44.

All objectives are corrected to a greater or lesser degree for chromatic aberration (presence of colored fringes around the images) and also largely for spherical aberration (failure to yield a flat field of view). When the spherical aberration is so corrected as to yield an especially large and *flat* field the objectives are often called *aplanatic* objectives. Although an objective may be so corrected as to yield a flat field, images of objects lying near the circumference are apt to be hazy or indistinct, the result of a form of spherical aberration known as coma; this is especially marked in high power objectives and requires unusual care in construction for its elimination.[1]

In all ordinary so-called *achromatic* objectives the corrections are usually such as to bring the rays of *two* spectral colors to a focus. In such lenses the optical and chemical foci may lie in different planes and therefore such objectives may not give really good results if employed in photomicrography; for this reason specially corrected achromatic lenses called photo-

[1] See Spitta, Microscopy, London, 1909.

objectives are manufactured. When in the correction for chromatic aberration *three* spectral color rays are brought to a common focus the objectives are known as *apochromatic* objectives. In these objectives the chemical and optical foci are identical and we have the highest grade of lenses at present available. Although in apochromatic objectives rays of three colors are brought to a correct focus, the images produced by these three sets of rays are not coincident and thus yield a colored fringe or halo at the edges of the field. This, however, is eliminated by employing slightly over-corrected eyepieces, known as *compensating* eyepieces, in which the construction is such as to neutralize, or compensate for, the errors due to the objectives. Beautifully clear, colorless images are thus obtained, but the field is rarely flat.

Objectives are either *dry* or *immersion* according as they are designed to be used with air or with some liquid between the front or lower lens and the preparation. High power dry objectives must each be specially adjusted for a certain definite thickness of cover glass. In order to permit some freedom of choice in cover glasses most high grade high power dry objectives are *adjustable* and are provided with a movable graduated collar, permitting the regulation of the objective for the thickness of the cover glass used; that is, a part of the combination of lenses making up the objective may be raised or lowered in the mounting, thus affording a correction for the displacement of the image brought about by the cover glass. By consulting the diagram, Fig. 19, page 44, it will be seen that by turning the collar C the combination of lenses L will be displaced and their distance from the combination L′ will either be increased or diminished. A cover glass which is thicker than that for which the objective is corrected affects the image in the same manner as if the spherical aberration were over-corrected, while on the other hand if too thin the effect produced is similar to that of under-correction. In the first case the focal distance of the objective must be increased, and in the second, decreased. This is accomplished by turning the adjusting collar to the right or left, as the case may require, or, in the absence of such a device, by shortening or lengthening the distance between the eyepiece and the objec-

tive, shortening for cover glasses too thick, and lengthening for those which are too thin. Fitting into the body tube of modern microscopes is a tube which may be drawn out several centimeters. This tube is known as the *draw-tube* and is graduated in millimeters. Objectives are commonly corrected (for use on the usual type of microscope) for a tube length of 160 millimeters. The 160-millimeter mark will therefore be found only when the draw-tube is pulled out a short distance. This position of the standard mark permits lengthening or shortening the draw-tube, and thus correcting for cover glass thickness as stated above.

In addition to corrections for chromatic and spherical aberration at least two other factors must be taken into account in comparing, or choosing between, objectives of similar equivalent focal length. These are the *angular aperture* and the *numerical aperture* of the objectives. By the angular aperture of an objective is meant the "angle contained, in each case, between the most diverging rays issuing from the axial point of an object (i.e., a point in the object situated on the optic axis of the microscope), that can enter the objective and take part in the formation of an image" (Carpenter-Gage).

This angle is obviously that of the cone of light rays whose apex lies in the optic axis of the microscope at the point where the axis passes through the plane of the object and the diameter of whose base is equivalent to the opening of the front lens combination of the objective.

Dry objectives may be compared with each other with reference to their angular aperture. In general the angular aperture depends largely upon the diameter of the front combination of the objective, and usually in objectives of like magnifying power, the greater this diameter the larger will be the angular aperture and the wider and clearer will be the area or *field* covered. It is also generally true that the shorter the equivalent focus of the objective, the larger its angular aperture and that dry objectives of small working distance usually have large angular apertures. It is obvious that in dry objectives an easy comparison of the relative areas of field covered is afforded by a consideration of angular apertures. The true field of view of a compound mi-

croscope is, however, controlled by the ocular, as will be seen below.

It would appear at first sight that the light-grasping power of an objective is indicated by its angular aperture. Such is not the case, for Abbe has proved that in comparing objectives as to their light-grasping and transmitting power it is the *sine of half the angle of aperture* which should be taken into account and not the angular aperture; and further, that since objectives are not all dry, the index of refraction of the medium between the objective and the object must necessarily be considered. It is therefore now conceded that the light-grasping and transmitting power of an objective is equal to the refractive index of the medium in which the objective dips multiplied by the sine of half the angle of aperture. The product is what is known as the *Numerical Aperture* and is expressed N.A. = $n \cdot \sin \mu$.

If the above formula is accepted as true it is evident that if the value of n is increased the numerical aperture will likewise be increased.

The light rays illuminating an object by transmission through the preparation evidently pass from a denser medium (object) to a rarer medium (air), and following the law of refraction are bent away from the perpendicular. Hence part of these light rays are lost, since they are bent so far that they cannot enter the small front lens of the objective. To prevent this loss and secure a brilliant image it is necessary, according to the formula N.A. = $n \cdot \sin \mu$, to increase the value of n. Therefore, to obtain very high powers, the substitution of some liquid for air ($n = 1$) between the objective and the preparation becomes imperative in order that the image may be bright and distinct.[1]

Objectives permitting the use of a liquid in this manner are known as *immersion objectives*. When water is employed ($n = 1.33$) they are called *water immersion*, and when an oily liquid, *oil immersion*. Usually the oil consists of slightly thickened oil of cedar wood ($n = 1.52$), and since the refractive index of glass object slides and cover glasses is approximately 1.52

[1] Abbe found that the brightness of the image varies as the square of the numerical aperture.

also, such objectives are more commonly designated ***homogenous immersion*** objectives. Alpha mono-brom naphthalene is also sometimes used as an immersion fluid ($n = 1.66$) and gives us the highest numerical aperture obtainable.[1] Since oil immersion objectives have the highest numerical apertures they therefore yield the brightest and the clearest images, and represent the highest development in the art of microscopic objective manufacture.

In the case of immersion objectives the working distances are usually greater than the equivalent foci.

Variable Objectives are so constructed that the distances between two sets of component lenses may be changed by means of a graduated collar, permitting a wide range in the magnifying power of the objective. A single objective is thus made to do the same work as a number of objectives of fixed system. For low powers, the chemist will find an objective of this sort an exceedingly great convenience. Fig. 1 shows a variable objective as manufactured by Zeiss. Its range of magnification lies between 29 and 43 diameters and its free working distance between the limits 53 millimeters and 13 millimeters. To obtain a similar range with non-variable objectives requires four or five. Variable objectives do satisfactory work and are relatively inexpensive.

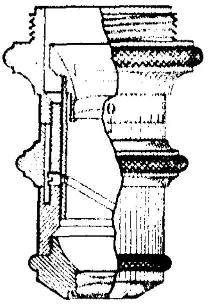

FIG. 1. Zeiss Variable Objective.

A measure of the quality of an objective lies in its ability to make clear any fine and delicate details of structure. It is, therefore, customary to speak of the *resolving power* of objectives and express this attribute in terms of the number of fine lines per unit length the different objectives will render distinctly visible,

[1] An Abbe condenser of the commonly purchased form has as its maximum a N.A. of 1.20; while the three lens condensers of the highest type will transmit rays only up to a numerical aperture of 1.40. Unless therefore a special achromatic condenser is available, it is manifestly useless to employ alpha monobrom naphthalene immersion objectives since only a part of the full aperture will be available.

or, in other words, the resolving power of an objective can be defined as the minimum distance apart two lines or spots may be and yet appear as *two distinct* individuals. The resolving power of an objective is dependent upon its light collecting and light transmitting power; this in turn is governed by the numerical aperture and by the particular wave length of light entering the lens system.

From the viewpoint of the physicist the resolving power of an objective can be expressed as equivalent to $\frac{\lambda}{2\ \text{N.A.}}$, where λ is the wave length of light. This is based upon the assumption that the illuminating cone of light *completely fills* the aperture of the objective. From this formula, we find that, theoretically, the limit of resolution will be attained when the magnification of an objective reaches about 900.

The chemist is not alone interested in the brightness of image and the resolving power of an objective, but he is vitally concerned with another property, namely, the ability of the objective to make clear objects or structures in more than one plane. This is known as its *penetrating power*. The penetrating power of an objective has been shown to be inversely proportional to the numerical aperture and to vary as the square of the equivalent focus.

Leaving out of consideration the numerical aperture, it is found that the resolving power of an objective is inversely proportional to the wave length of light. By employing light rays of very short wave lengths we may thus obtain exceptional resolution.

In the above consideration it has been assumed that the illuminating cone of light *completely fills the aperture of the objective.* Nelson[1] has shown that in practice with the older types of objective we can rarely count upon more than three-fourths of the available numerical aperture. More modern objectives perform somewhat better.

In comparing objectives as to their ability to render structures clear and distinct it is usual to do so by computing the

[1] J. Roy. Micro. Soc., 1893, 15–17.

number of ruled lines to the inch or millimeter each one will make clearly visible (resolve). To obtain these values the reciprocal of the above given standard formula must be taken. Since, as pointed out, we cannot obtain the theoretical resolving power in practice a correction coefficient must be introduced into our formula. Nelson assigns to this coefficient the value 1.3. The practical working formulas then become:[1]

$$\textit{Available resolving power} = \frac{2\ \text{N.A.}}{1.3\ \lambda},$$

$$\textit{Available illuminating power} = \left(\frac{\text{N.A.}}{1.3\ \lambda}\right)^2,$$

$$\textit{Available penetrating power} = \frac{1.3\ \lambda}{\text{N.A.}}.$$

For white light a mean value may be assumed to be $\lambda = 5607$ ($= 0.5607\ \mu$) and for blue light $\lambda = 4861$ ($= 0.4861\ \mu$).

Advantage has been taken of the increased resolving power attainable by short wave lengths in the application of ultraviolet light (λ 2500±) to photomicrography. In this way a resolving power of three times that obtainable with red light (λ 7500±) may theoretically be obtained. Since ordinary glass is opaque to rays below λ 3000, it is essential that the condenser, objectives, oculars, object slides, etc., be made of quartz. For similar reasons quartz is preferable to glass in all ultramicroscopy, moreover, most glass exhibits a marked violet fluorescence under the influence of ultraviolet rays; quartz does not.

SELECTING OBJECTIVES.

It is evident from the above briefly outlined considerations, that the choice of an objective of a given equivalent focus and magnification must depend upon the nature of the work the objective will be required to perform. In microchemical analysis, because of the rather unusual conditions which obtain, objectives must be selected with special reference to *long working distance* and *great depth of focus;* the brightness of field and the resolving power necessarily lost are, in this class of work, of

[1] Nelson. J. Roy. Micro. Soc.. 1906. 521.

little importance, since only low powers are employed and the indices of refraction of objects and surrounding medium are generally sufficiently different to permit an easy study of the preparations. When magnifications of from 300 to 500 are required in microchemical examinations, difficulty will be experienced in obtaining suitable objectives unless the prospective purchaser stipulates long working distances, since the working distance of those manufactured for the use of biologists is far too short to permit their application to the study of uncovered and therefore thick drops of liquid.

For the study of objects lying in a single plane, for polished surfaces, rulings, fine etchings, etc., in which sharpness of outline and delicacy of structure or tracery are present, flatness of field and high numerical aperture are essential. Our choice is, consequently, here restricted to aplanatics or to *apochromatics*, bearing in mind the fact that the resolving power of an immersion objective, where applicable, is greater than that of a dry one.

If, on the other hand, the investigation to be conducted involves much photomicrographic work, photo-objectives, apochromatics, or better still, the very carefully constructed microplanars, microsummars, or microanastigmats, should be selected. For in addition to the fact that the chemical or actinic rays are not properly brought to a focus, it should be remembered that ordinary microscopic objectives are corrected for a fixed tube length, usually 160 millimeters, while in the case of photographic work the distance between objective and plate holder is variable and in all cases much greater than the standard tube length.

THE CARE OF OBJECTIVES.

Objectives should always be most carefully handled and protected from dust and vapors. They should be kept dry and clean by wiping with clean *new lens paper*.[1] Never use a piece of lens paper more than once, nor touch the lenses of objectives or oculars with the fingers or with cloths.

[1] "Lens paper" is a soft absorbent tissue-like paper made from long flexible fibers expressly for cleaning lenses.

When abrasives are employed (as, for example, in metallographic work) even in adjoining rooms, all lenses should first be blown upon (but not breathed upon) and then dusted off with a very soft camel's hair brush before wiping with lens paper, otherwise serious scratching of the glass will sooner or later result.

Dust on the back lens combination of the objective is often responsible for great loss of definition and greatly reduces the resolving power of an objective. Dust on the rear lens may easily be seen by removing the ocular, illuminating the objective to its full capacity and looking into the microscope tube. Often a screen of ground glass placed in front of the microscope mirror renders the dust particles more clearly discernible.

After using an immersion objective *immediately* wipe off the immersion fluid with lens paper, then if the fluid is oil, wipe the lens with lens paper moistened with xylene, and finally wipe dry. Never use alcohol in cleaning objectives or any part of the microscope. Never allow an objective to remain moistened with any fluid whatsoever a moment longer than absolutely necessary.

When focusing a microscope upon a preparation, first turn the body tube down by means of the coarse adjustment until the objective is closer to the preparation than is indicated by the equivalent focus of the objective, watching carefully with the head to one side to see that the front lens is not forced against the slide. Look into the microscope and *slowly raise* the tube by the coarse adjustment until the object is almost in focus; complete the adjustment by means of the fine adjustment. *Never focus down* while looking into the instrument. Failure to observe this simple rule is apt to lead to serious loss and considerable expense.

Never change from one objective to another without first making sure that the body tube has been raised sufficiently to allow the new objective to be slipped into place without injury to the preparation on the stage or to the objective.

Never handle objectives or oculars or, in fact, any parts of the microscope with dirty, greasy, or wet fingers, or when the hands are so cold as to incur danger of dropping the apparatus.

Never use a high power until the preparation has first been examined and centered with a low one. Remember that it is possible to see more of the object and see it better with low powers than with high ones.

Invariably work with the lowest power which will clearly define the preparation. The most common fault of the beginner is to employ too high a magnification.

Oculars. — The function of the ocular or eyepiece of a compound microscope is to magnify the real inverted image of the object formed by the objective; but in addition to this the usual type of ocular employed serves as a collector of light rays and increases the brilliancy of the image and therefore of the useful area of the field of view.

Eyepieces are of two types, those in which the real image is formed inside the lens system of the ocular, and those in which the real image is formed outside the ocular. The former are known as *negative* or *Huygenian* eyepieces; the latter, as *positive* or *Ramsden* eyepieces.

Oculars are designated either by their equivalent focal length, by the number of times they magnify the real image formed by the objective or by arbitrary numbers or letters based upon either equivalent focus or magnification. The shorter the equivalent focal length the higher the magnification. When designated by their magnification the figures with which they are marked indicate the number of times the real image is magnified.

In all ordinary microscopic work negative or Huygens oculars are employed, the use of positive or Ramsden oculars being restricted to micrometer eyepieces. In the case of positive oculars the entire lens system acts as a magnifier.

The usual type of negative eyepiece is shown in section in Fig. 2, with the passage of the light rays diagrammatically indicated. It will be seen on consulting the diagram that the lower or field lens, as already stated, collects the light rays and reduces the size of the image formed by the objective and is thus, optically, in reality a part of the objective system; the eye lens functions as a magnifier of the image formed by the field lens. It is evident

that the position and diameter of the diaphragm in the eyepiece greatly influence the character and size of the field lens image, and are thus largely responsible for the area of the field of the microscope, and consequently are very closely associated with the resolving power of the optical combination employed. The light rays leaving the eye lens are concentrated within a tiny circle, known as the *eye-point, eye-circle, Ramsden disk,* or *Ramsden circle.* The designation "eye-point" has been given to this smallest bright spot of light, since it is the proper position for the pupil of the eye when looking into the microscope. If either above or below the eye-point, light rays are lost and the image is less bright and less clear. The diameter of the eye-point is dependent upon the numerical aperture of the objective and the magnification of the microscope. It will be found upon measuring the diameters of the eye-circles produced by different oculars with the same objective, that they are inversely proportional to the magnification obtained and that with different objectives and one and the same eyepiece, the diameter of the eye-circle varies directly as the numerical aperture of the objectives. The value of the numerical aperture in any consideration of the probable performance of different objectives of the same equivalent focus has already been alluded to. We now see that there is a close relation existing between numerical aperture and the performance of the ocular; for example, of several objectives

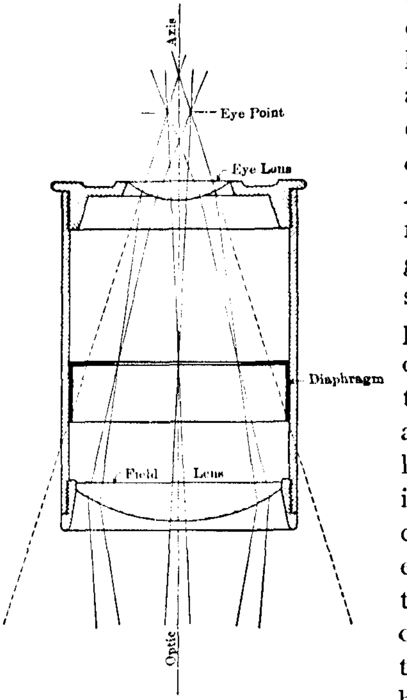

FIG. 2. Path of Light Rays in a Negative Eyepiece.

of approximately the same equivalent focus, but possessing different numerical apertures, that one having the highest aperture will permit the employment of an ocular of much higher power and thus yield a considerably greater magnification without loss of detail.

If an attempt is made to increase the ocular magnification beyond a certain limit the eye-point becomes so small that the image resulting is blurred and indistinct. This fact must be borne in mind in microchemical examinations where high magnifications must often be brought about by using high power oculars with low power objectives of long working distance.

In order that images of satisfactory distinctness and sharpness of detail may be obtained, the optical combination for work must be such as to yield an eye-point not less than one millimeter in diameter nor greater than the diameter of the pupil of the eye of the observer.[1] The diameter of the eye-point and the position of the plane in which it lies can easily be ascertained by holding a piece of thin ground glass or waxed paper over the ocular, shading it with a screen or with the hand and raising or lowering it until the bright circle seen upon the glass or paper attains its *minimum* diameter.

Oculars to be used on the chemical microscope should have the plane of the eye-circle at such a distance above the eye-lens as to permit the adjustment of drawing or other prisms to the position of maximum brightness and diameter of field.

Compensating or *Compensation* oculars are eyepieces specially designed for use with apochromatic objectives. They are so called because of the fact that they aid in the correcting of chromatic aberration.

Oculars are said to be *par-focal* when they are so constructed as to permit their interchange on the microscope without disturbing the focus of the instrument.[2]

Compensating oculars are usually par-focal.

[1] Wright, F. E., The Methods of Petrographic Microscopic Research, Bul. 158, Carnegie Inst. Washington, 1911, p. 38.

[2] For a consideration of the conditions to be fulfilled in their construction, see Gage, The Microscope, p. 47. Tenth ed.

Projection Oculars, as their name implies, are used in photography or with the projection microscope. Their purpose is the projection of a bright and clear image upon a screen whose distance from the ocular may be varied. This is accomplished by having the eye lens of the ocular movable in the mount, thus changing the distance between eye lens and ocular diaphragm.

Goniometer oculars are eyepieces provided with cross-hairs and graduated circle. They are used for the measurement of crystal angles and may be substituted for a rotating graduated stage and thus permit angular measurements on any microscope whose tube they fit.

The Care of Oculars. — In general the suggestions made with respect to objectives on pages 9, 10 and 11 apply with equal force to eyepieces.

To remove cross-haired oculars grasp them firmly between the fingers by the milled head and first *lift* them free from any slot into which a stud upon them may fit, then remove them by a screw motion.

Dust on the ocular lenses may be located by raising and turning the entire ocular, then by unscrewing and turning first the field lens, then the eye lens. If both lenses are clean and the objective is clean yet the field shows specks of dirt and appears blurred, the dust and dirt will be found to be on the disk carrying the cross-hairs or micrometer scale. Exceeding great care is required in cleaning cross-hairs and micrometer plates resting upon the diaphragm of the ocular and should only be undertaken by a person having patience, care and steady nerves.

Use low oculars first and confine the work whenever possible to medium powers. Have recourse to high power oculars only as a last resort, since they cut down the light to such an extent as to cause fatigue and eye-strain.

Always look into a microscope with both eyes open.

In the study of flat preparations between slides and cover glasses, the general rule is to obtain the proper magnification chiefly by means of the objective, using a *low power ocular.* But in the case of irregular surfaces or curved and heaped up drops of liquid, *the reverse* is essential and low power objectives

(having long free working distance) and high oculars must be adopted. The latter procedure is also indicated when employing dark ground illuminators or ultra-condensers, namely, increase the magnification by the ocular.

Limit of Magnification. — A consultation of the tables of magnification given in the catalogues of the leading makers of microscopes and microscope lenses will show that with the modern compound microscope employed in the usual manner with stock achromatic objectives and Huygenian oculars, a magnification as high as 1500 to 2000 may be obtained, and that with stock apochromatics and compensating eyepieces this may still further be increased to 3000, the upper limit of listed combinations.

Theoretically there is *no limit* to the magnification which may be obtained. But this must not be confused with *resolving power* which enables us to see things clearly and permits differentiating one part or structure from another. Great magnification avails us nothing if the image be blurred and irrecognizable. A little thought will show that there must be a limit to the resolving power practically available beyond which we cannot go.

The shortest violet rays producing the effect of light upon the average normal human eye may be assumed to have a wave length of approximately λ 4000 (or 0.4 μ)[1]. It has been shown that under ordinary conditions the smallest particle which will be visible as a black spot upon a light ground must have a diameter equal to at least half this value (Helmholtz-Abbe). Moreover, a lens, owing to diffraction, yields as an image of a point, a diffraction disk and not a point. The final image may be considered as consisting of a series of diffraction disks or patterns, and if the distances between bright points are such as to cause an overlapping of the resulting disks or their surrounding circles, a blurring of the image must result. Thus we are limited, in our attempt to *see and study* infinitely small particles, by the sensitiveness of the human eye, on the one hand, which cannot properly respond to the stimuli of very short wave lengths, and to the fact, on the other hand, that no matter how great the mag-

[1] One micron, designated by the Greek letter μ, is equivalent to one-thousandth of a millimeter (0.001 mm.).

nification employed we cannot bring about a separation of the overlapping rings of the diffraction patterns. The result, therefore, must be at the best a vague, blurred, uninterpretable image or merely a diffraction pattern.

If, therefore, our wave theory of light is correct, the most minute particle which we may hope to render distinctly visible by our compound microscopes by transmitted light must have dimensions of at least 0.2 μ. It should not be inferred, however, that the existence of particles many times smaller cannot be indicated, for an invisible particle may yield a *large diffraction pattern*, a phenomenon which makes ultra-microscopic investigations possible; but we must bear in mind that in the case of ultra-microscopic particles we have no picture or image of their shape or structure and that we know of their existence simply through the light diffracted by them and thus have passed far beyond the range of the resolving power of our lenses. Although it is true that the limit of resolving power, 0.2 μ, has been seriously questioned by men of recognized authority, it may be accepted as beyond dispute that a moderately skillful microscopist cannot hope in practical work to carry the resolving power of his instrument beyond this limit.

In ordinary work a magnification of from 750 to 900 diameters is the upper limit of true usefulness in the study of *details of structure*. Above this point the worker must be an exceptionally keen and skillful observer in order that he may properly interpret the appearances seen in the images formed.

It is best, therefore, to ***make it a rule to work with low magnifications.***

CHAPTER II.

MICROSCOPES FOR USE IN CHEMICAL LABORATORIES.

The problems which the chemist is called upon to solve where the microscope is of great value, if not actually essential, are so diverse in their nature and the materials to be examined so varied in size, outward fòrm, structure and composition that it is safe to say that no single instrument will ever be constructed which will meet all requirements and fulfill all conditions. Before deciding upon any given style or model of instrument the intending purchaser should, therefore, first carefully consider the kind of work his instrument will most frequently be called upon to perform.

A microscope for microchemical analysis and applicable to the ordinary problems arising in the chemical laboratory should fulfill the following requirements:

1. The stand should be substantially built so as to be easily and safely carried about. It should permit the attachment of the usually employed accessories, such as a mechanical stage, Abbe condenser, camera lucida, polarizing apparatus, etc. A hinged pillar allowing the inclination of the microscope is a valuable feature and a great convenience. In a vertical position for work the stand should be low enough to permit observations being made in comfort, without the necessity of having either specially high stools or low tables. It is desirable that the instrument be entirely finished in black and have as few bright reflecting surfaces as possible.

2. There should be coarse adjustment by diagonal rack and pinion of as great range as possible. When the movement of the rack is short the usefulness of the microscope is greatly restricted, since low powers cannot then be used with thick objects. A sensitive fine adjustment is also an essential, and if the fine adjustment is provided with micrometer screw and gradu-

ated head, micrometric measurements of thickness are possible, and refractrometric determinations are simplified.

3. The body-tube carrying the objective and eyepiece should be of sufficient diameter to permit the microscope being used for photography, and it should be provided with an inner *graduated* draw-tube whose lower end is tapped with standard or universal thread for the attachment of very low power objectives or of amplifiers.

4. The stage should be circular, rotating and provided with centering screws with small milled heads. The circumference of the stage should be graduated in degrees and the surface covered with hard rubber. The stage must be constructed in such a manner as to be easily removed by simply loosening the centering screws, in order that thick objects may be examined, various heating devices employed, and opaque objects to be studied by means of vertical illuminators may be brought into focus on the substage without interfering with the proper adjustment of radiant or illuminator.

5. The substage should consist of a simple ring, raised and lowered by screw or rack and pinion, and must permit of being swung to one side from under the stage. This ring carries condenser, polarizer, auxiliary stage, heating devices, etc. The ring should be tapped at one side and fitted with thumb-screw or with some sort of locking device to hold firmly in place the accessories fitting into the substage ring. The substage ring should also be provided with a slot or other contrivance for lining up the polarizer. If the microscope is to be used chiefly for observations at high temperatures, polarization by reflection is best.

6. It is essential that the microscope be fitted with attachments for study with polarized light including converging as well as plane. For all ordinary problems, the best system appears to be rotating prisms of the type of the Nicol prism, one placed below the stage, the other above the objective. One or both of these polarizing prisms should be mounted so as to rotate and be provided with graduated circles. It will be found to be a great convenience if the construction is such that when polarizer

and analyzer are in their proper places the planes of vibration of these prisms will be crossed without the necessity of experimental adjustment.

7. The instrument must be provided with a mirror, plane on one side, concave on the other, of as large diameter as possible, which permits turning over from plane to concave side when the microscope is in a vertical position without the necessity of tipping the pillar. The mirror should be mounted on a swinging bar to provide very oblique light and it is desirable that the bar have an extension arm in order that the mirror may be swung to give oblique light above the stage.

8. At least two of the oculars (a high power and a low power) must be fitted with cross-hairs and stud fitting into a notch or slot in the upper end of the draw-tube.

9. The objectives should be of exceptionally long working distance and in combination with the eyepieces should yield a magnification of from 15 or 20 diameters to 300 or 350 diameters for ordinary work.

10. The instrument should be of as simple construction as possible and should permit the easy and inexpensive replacement of parts damaged through accident.

TYPES OF MICROSCOPES FOR MICROCHEMICAL INVESTIGATIONS.

Instruments for General Use. — A microscope which conforms very closely to the specifications given above is shown in its latest model in Fig. 3. This instrument has been constructed after specifications of the author[1] to meet most of the problems arising in chemical laboratories in which a microscope may be employed. In this model an attempt has been made to provide as compact an instrument as possible, having an exceptionally great distance between the optic axis and the arm, thus providing sufficient manipulative space for large objects, cells, etc.; the range of the body tube is also sufficient to permit even very low powers to be used with vertical illumina-

[1] Chamot, J. Applied Micros., **2** (1899) 502. Manufactured by the Bausch & Lomb Optical Co., Rochester, N. Y.

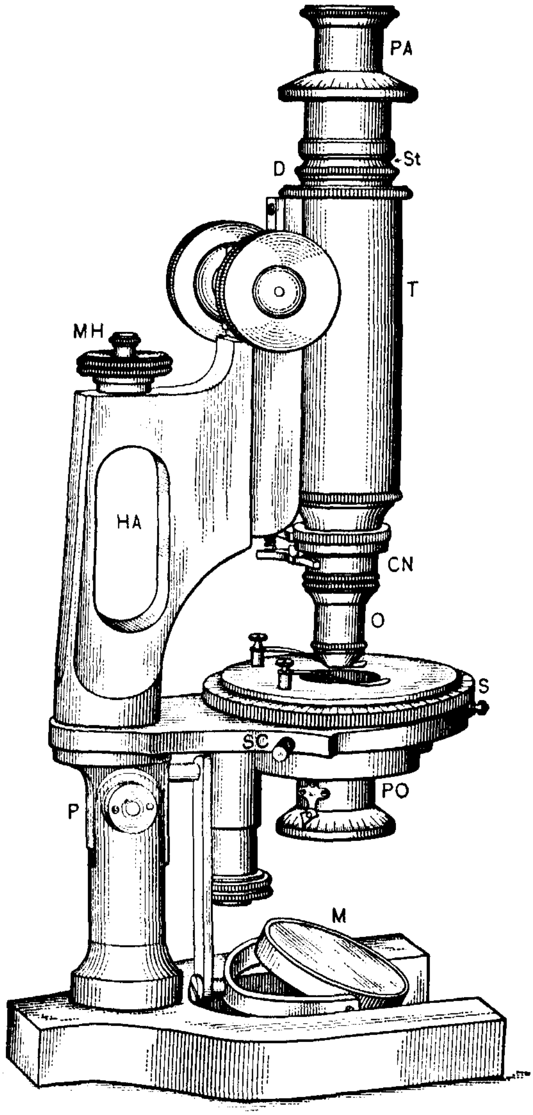

Fig. 3. Simple Polarizing Microscope for Chemical Microscopy.

tors, while the range of the substage screw is long enough to permit focusing the substage ring with auxiliary stage attached in metallographic work, thus keeping the body tube with an illuminator in line with the radiant.

The milled heads of the stage centering screws have been made much smaller and shorter than usual in order that they may interfere less with manipulations on the stage and be less subject to displacement.

The revolving stage with circle graduated into degrees is removable by merely unscrewing the centering screws, and then lifting out the stage. This permits inserting into the substage ring an auxiliary stage for use with thick objects, or opaque objects, to be studied with a vertical illuminator (see Fig. 41, page 88), or when preparations are to be heated with a tiny flame.

The polarizer PO consists of a Nicol prism set in a rotating mounting graduated into degrees. A stud in the fixed part of the mounting fits into a slot in the substage ring, thus insuring that the polarizer mounting is always in the same relative position. The analyzer, PA, a Thompson prism, fits over the eyepiece, rotates, and is provided with a graduated circle. In the mounting of the prism provision is made for adjustment in a vertical direction so as to ensure a wide field of view with all oculars. A slot in the collar in which the analyzer revolves engages a stud St on the draw-tube of the instrument. The draw-tube itself moves vertically only, thus if the polarizer and analyzer be properly inserted and their graduated circles set at zero, the prisms are crossed without further adjustment. The placing of the analyzer over the eyepiece in a microscope for microchemical analysis will be found to be much safer than the more convenient mounting sliding into the body tube, as in petrographic instruments. When the instrument is to be much used in the microscopy of foods a supplementary polarizer may be obtained which fits into the ring below the Abbe condenser, thus allowing the prism to be swung quickly aside without interfering with the illuminating devices.

Instruments made by other firms for chemical microscopy

differ but little from that shown in the illustration. It has, therefore, been thought unnecessary to picture them here.

Microscopes for Special Purposes. — When large samples of powdered material are to be investigated, as in the examination of dry, powdered or granulated foods, drugs, etc., for adulteration, a microscope with large stage of the type shown in Fig. 4

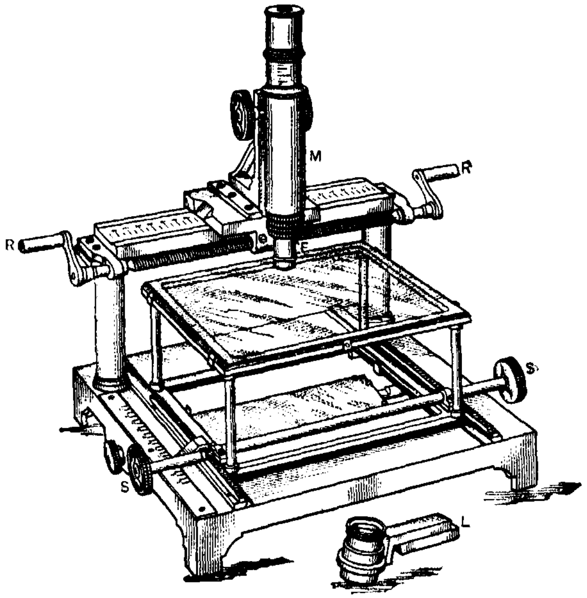

Fig. 4. Microscope with Large Stage for the Rapid Examination of Powdered Material.

is of great assistance.[1] The material is thinly spread out upon the plate glass stage, and the microscope is made to pass by means of the screws S and R over the entire area covered by the material. A very low power L is first employed until some particle is found, needing to be studied more carefully. The particle is centered under the lens, L is then removed and the compound microscope M slipped in place in the same slot previously occupied by L. The particle in question now falls under the compound microscope. This type of microscope primarily intended for the examination of large sections of the brain will

[1] Made by E. Leitz, Wetzlar and also by Nachet et Fils, Paris.

be found a great saver of time, labor and material. Its applications are many. In laboratory work involving the study of plates of bacterial cultures it will be found to be far superior to microscopes of the ordinary type, since plates of large size may be examined at any point within their areas.

The compound microscope is provided with rack and pinion coarse adjustment and with a quick acting screw adapter F fitted to the end of the body tube for fine adjustment.

Comparison Microscopes. — It not infrequently happens that it is found desirable to carefully compare two preparations or two different samples. This is especially true in quantitative microscopy. With ordinary microscopes it is necessary to place first one sample, then the other, under the microscope, make drawings, measurements and take mental note of the appearance of each preparation in turn and then compare the mental pictures by the aid of the data at hand. This process is not easy, and the results not always trustworthy even in the hands of an expert without long and exceptionally thorough studies. Photomicrography offers a fair solution but here again the time required and the additional manipulations necessitated prevent its general application.

This need of some device whereby quick and rapid comparisons might be possible has long been felt, but no suitable instruments were placed upon the market until very recently. These new instruments have received the name Comparison Microscopes. They are so constructed that the images formed by two different optical systems are brought into juxtaposition, so that the observer is able to simultaneously see the images of two different objects.

As long ago as 1885, Inostranzeff[1] employed what he designated as a comparison chamber, consisting of two sets of totally reflecting prisms so mounted in a rectangular chamber as to reflect, into a single eyepiece, the images of half the field of each of two microscopes.

Two years later Van Heurck[2] improved the Inostranzeff in-

[1] Jahrb. f. Min., 2 (1885), 94; J. Roy. Micros. Soc., 1886, 507.
[2] Van Heurck, J. Roy. Micros. Soc., 1887, 463.

strument by a different arrangement of prisms. This latter type has again been revived by the Bausch and Lomb Optical Company in 1912, and by E. Leitz in 1914.

A somewhat similar comparing device, consisting of two totally reflecting prisms, was proposed by Ewell[1] and employed by him as a colorimeter. The Van Heurck comparison eyepiece, Fig. 5, as constructed by Bausch and Lomb consists of a rectangular cell provided on the lower side with two orifices and

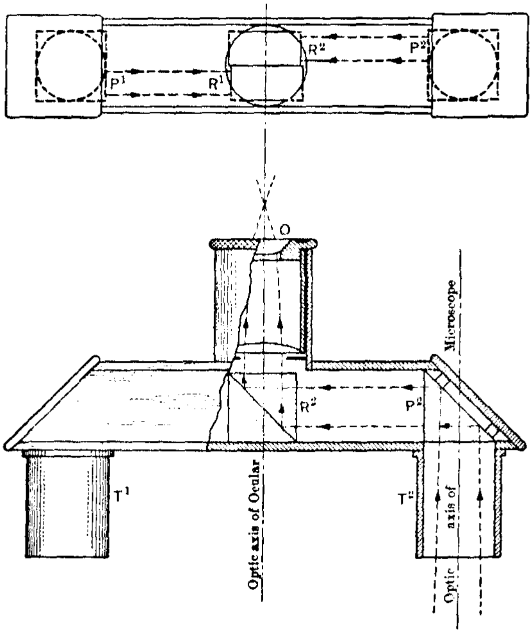

FIG. 5. The Bausch and Lomb Comparison Eyepiece.

with tubes T^1 and T^2 of the same diameter as ordinary oculars, and at such a distance apart as to permit their simultaneous insertion into the tubes of two microscopes placed side by side. Midway between these tubes on the top of the cell is an opening with a tube into which slides a Ramsden eyepiece O. Above the tubes T^1, T^2 are placed totally reflecting prisms P^1, P^2,

[1] Ewell, J. Roy. Micros. Soc., 1910, 14.

which reflect the images, formed by the objectives of the microscope, into the rectangular prisms R^1, R^2, situated just below the ocular O. The prisms R^1, R^2 consist of rectangular pieces of glass cut through diagonally and cemented together, the inclination of the cut surfaces being parallel to the reflecting surfaces of P^1, P^2, respectively. Upon looking into the ocular O the field is seen to be divided into an upper and a lower part by a line passing from left to right. It is obvious that the image of half the field of one microscope will be seen in one of the halves of the ocular, while the other half of the ocular will exhibit half the field of the other microscope. In order to facilitate focusing the microscopes the tube T^1 is of such diameter as to fit *snugly* into the tube of one of the microscopes, while the tube T^2 is of less diameter and hence fits *loosely*. The microscope carrying T^1 is therefore focused first. Objects to be carefully compared by means of this instrument must necessarily lie in the same plane, otherwise the magnification in one half-field will be greater than in the other. Where slight variations in magnification can be neglected, the thicker preparation is placed upon the stage of the microscope carrying the tight tube of the comparison eyepiece, or if chemical microscopes (Fig. 3, page 20) are employed, one or both preparations may be supported upon the auxiliary stage and turned down until the upper surfaces of the two preparations lie in the same plane. This, however, is only possible when no substage condenser need be employed.

Comparison microscopes proper are of two different types, either they have a single eyepiece and make use of reflecting prisms or they consist of two microscopes with two eyepieces, the observer using both eyes.

The Leitz[1] comparison microscope, Fig. 6, consists of two microscope tubes A, B attached to a single pillar P movable by rack and pinion. A single stage S is provided with two openings, one for each microscope tube. Under each stage opening is placed an Abbe condenser with iris diaphragm and rings for stops, or for blue, green or ground glass. Each condenser is illuminated by means of a separate mirror on a swinging bar and

[1] Manufactured by E. Leitz, Wetzlar, Germany.

is adjustable up and down by a friction collar. To the upper end of each microscope tube is attached a large chamber C, C^1 containing reflecting *erecting* prisms. Above the chambers are the oculars E, E^1, provided with sliding diaphragms D^1, D^2. The prism chambers are so constructed as to rotate through a small arc in the directions of the arrows, thus bringing the eyepieces nearer together or farther apart for adjustment of the proper pupillary distance of the observer. The upper half of each eyepiece can also be rotated so that when the diaphragms D^1, D^2 are inserted to cut off half the field in each ocular, they may be turned until the diameters of each half field are parallel or coincident. After turning through the proper arc the thumb screws T^1, T^2 are tightened to prevent the adjustment from changing. By proper manipulation of the sliding diaphragms, the observer looking into the instrument with an eye above each ocular sees half the field from one preparation and half from the other in close juxtaposition. A very rapid yet critical comparison of one preparation with another is thus easily accomplished. Or D^1, D^2 may be so placed as to cut out the field of either tube, or if both are pushed in as far as they will go the fields will be superimposed, and the symmetry of two objects may be compared.

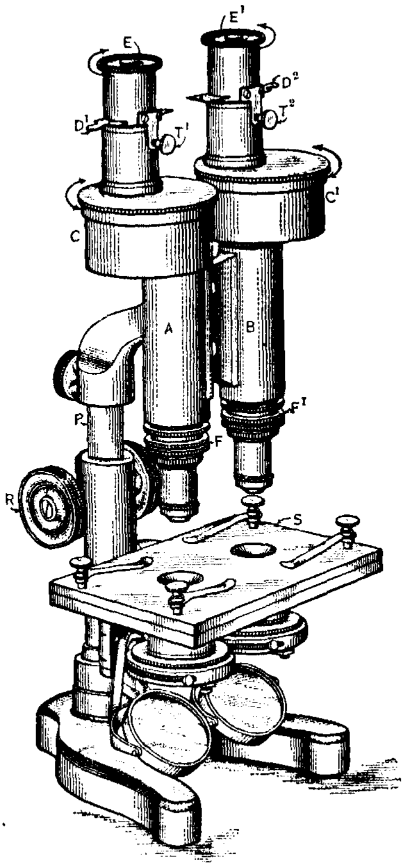

FIG. 6. The Leitz Comparison Microscope.

The coarse adjustment R by rack and pinion serves to roughly focus both tubes at once; then each objective is focused separately by means of the fine adjustment screw collars F, F^1 just above the objectives. That really satisfactory results may be obtained it is essential that both the sets of eyepieces and objectives shall be paired, i.e., shall have been constructed for use with a comparison microscope and be exactly equivalent in all properties. The fields are flat, brilliant, and with careful illumination and adjustment and a little practice most excellent results can be obtained. The instrument is adapted to all problems involving an exact comparison of size, structure or symmetry of microscopic objects, especially where the structure is so intricate as to render comparison and interpretation with the ordinary single compound microscope exceptionally difficult without recourse to photography. The value of the instrument in all problems of forensic chemical microscopy is evident.

A second type of comparison microscope[1] is provided with a single eyepiece only, the field being divided into halves. As in the previously described instrument, two microscope tubes are attached to a single pillar and both focused together by rack pinion. Attached to the tubes is a rectangular closed chamber of the Inostranzeff type provided with two sets of totally reflectin prisms, thus yielding to a single eyepiece half the field of view of each microscope. By means of a knob in the side of the chamber one set of prisms may be shifted at will so as to cut off the field of one instrument.

In addition to a single fine adjustment, simultaneously affecting both microscopes, each tube is provided with independent fine adjustment collars just above the objectives. A single stage with two openings carries two substages, each with an Abbe condenser and with a mirror. The instrument may be employed with polarized light, thus affording exceptional opportunities for exact comparisons in the search for food adulterants and in microchemical analysis. Since in this instrument we have a single ocular yielding a divided field, it is possible to obtain photomicrographs, half the area of the circle

[1] W. and H. Seibert, Wetzlar, Germany. Thörner, Chem. Ztg., **36**, 781.

in the negative obtained being the image of one preparation, the other half that of the second preparation. This instrument consists essentially of a stand similar to the Leitz with the microscope tubes joined by a prism chamber and therefore no illustration of its construction is necessary.

Photomicrographs and polarization studies are of course also possible with the comparison eyepiece described above.

When two microscopes are available the comparison eyepiece will be found to perform all the work which may be accomplished by means of instruments of the Seibert type and will entail little additional expense to the equipment of the microchemical laboratory.

Comparison microscopes are almost indispensable when frequent comparisons must be made between unknown and known or standard preparations, or when rapid approximate quantitative results are required. These instruments and the simple polarizing compound microscope may be said to be the only ones for what can be called general use in the chemical laboratory.

Special microscopes for micrometric purposes, such as reading scales, determinations of the positions of lines in the photographs of spectra, or measuring the diameter of depressions produced in testing for hardness by the Brinell method, will be found described in Chapter VII, page 147; microscopes for the study of ultramicroscopic particles in Chapter IV, page 54, while the special types of instrument for the examination of metallurgical products and large castings are taken up in detail in Chapter V.

For the investigation of molten material, liquid crystals, etc., microscopes of special construction have in recent years been placed upon the market. Most of these have followed the designs of O. Lehmann and comprise a great variety of forms.[1] One of the simplest of these is shown in Fig. 7. In this instrument polarized light (see Chapter VIII) is obtained by reflection instead of by the usual manner by means of a Nicol prism, in order to permit swinging the tiny Bunsen burner B below the stage. The light rays reflected from P and R are polarized and

[1] See Lehmann, Das Kristallisationsmikroskop, Braunschweig, 1910.

are sent through the preparation upon the stage by means of the mirror M. The analyzer consists of a prism sliding in and out of the microscope tube at A. In the illustration the dotted

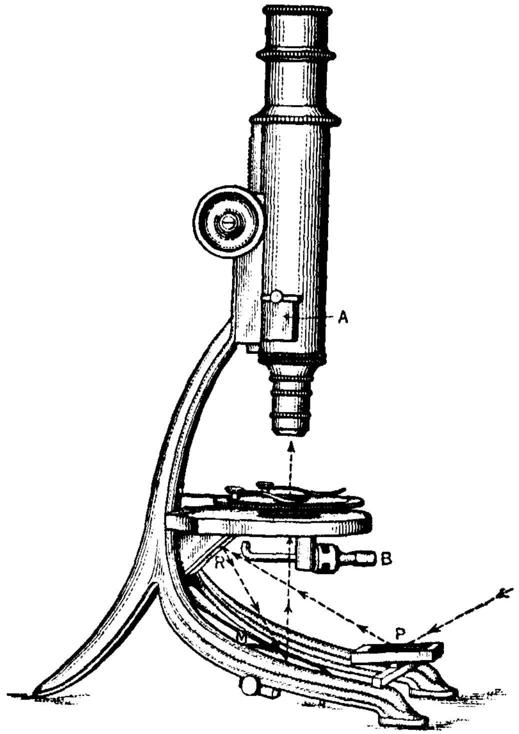

FIG. 7. Simple Form of Hot-stage Microscope. Polarized Light is obtained by Reflection from the Plates P and R and the Mirror M as indicated by the Dotted Arrows. A = Analyzer. B = Small Gas Burner which swings under the Stage Opening.

lines indicate the approximate direction of the light rays used to illuminate the object. When moderate temperatures are necessary the objective must be cooled by means of a blast of air directed upon the lower lens, and when high temperatures are employed the objective must be water-jacketed.

CHAPTER III.

ILLUMINATION OF OBJECTS; ILLUMINATING DEVICES.

Illumination and Illuminating Devices. — Of even greater importance than the selection of the correct combination of objective and ocular for the study of a preparation is the matter of proper illumination. The earlier in his work the student appreciates the importance of illumination and the more thought and care he expends upon this phase of microscopic methods, the fewer errors he will make and the more easily will he accomplish the objects of his investigations.

For convenience of discussion the modes of illuminating objects for microscopic study may be grouped under the following heads:

a. Transmitted axial light.
b. Transmitted oblique light.
c. Reflected axial light.
d. Reflected oblique light.
e. Oblique dark ground illumination.
f. "Orthogonal illumination" (Siedentopf Slit Ultramicroscope).
g. Differential color illumination.
h. By means of ultraviolet light, thus causing certain substances to become fluorescent.

a. **Transmitted Axial Light** obtained by means of the mirrors with or without a condenser may be said to be the usual or most frequently employed method of illuminating transparent and translucent objects. With low power objectives and objects of coarse structure no condenser is necessary, but when the object to be studied presents a fine structure and delicacy of tracery and when its refractive index lies close to that of the mounting medium, structural studies become difficult, if not impossible,

without moderately high powers and some form of substage condenser. It is therefore a safe rule to always employ a substage condenser unless exceptionally low powers are to be used; this of course does not apply to problems involving examinations with polarized light.

b. **Transmitted Oblique Light** is essential for the proper interpretation of appearances under the microscope of objects whose upper and lower surfaces are so placed as to lead to serious confusion if axial light is alone employed. Oblique light also aids in establishing whether the liquid medium or the object immersed in it has the higher refractive index. The value of oblique illumination may be better understood by referring to the diagram shown in Fig. 8. A transparent object O whose upper and lower surfaces are identical and perfectly symmetrical, is shown in section, lying upon an object slide upon the stage, with perfectly axial light as shown by the arrows. It will be obvious that even very careful focusing will fail to disclose the probable structure of the lower surface and that even the upper surface may be in doubt; but if oblique illumination be employed, usually a very faint shadowy image of the lower surface will be observed, slightly out of symmetry with the upper surface. Swinging the mirror to one side or decentering the iris diaphragm of the condenser when this is possible, and noting at the same time any change produced in the image, will show that the image of the upper surface has the appearance of sliding over the lower, providing the objective has sufficient penetrating power. Under these conditions the trained observer is able to form a fairly accurate conjecture as to the morphology of the object under observation.

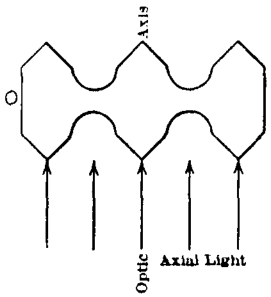

FIG. 8.

Cleavage planes, infinitely narrow fissures or structures, the arrangement of whose elements is so fine and delicate as to be practically indistinguishable by axial light, may become easily discernible by oblique illumination; but as intimated above,

the character of the information thus gained is necessarily closely associated with the resolving power, penetration and, to a certain extent, the size of field of the optical combination above the stage.

DEVICES FOR ILLUMINATION BY TRANSMITTED LIGHT.

Condensers. — In order that sufficient light may enter a high power objective to produce an image of such a degree of brightness as to be easily studied, it is essential that some device or apparatus shall collect, concentrate and send through the object light rays at an angle which will *fill the aperture* of the objective.

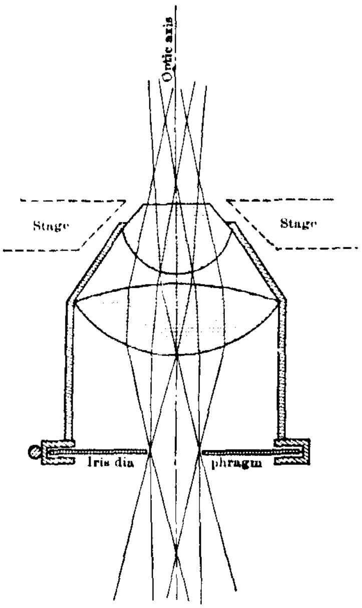

FIG. 9. Diagram of Abbe Condenser; Axial Light.

The usual construction of this device is shown in diagram in Fig. 9 and is known as the *Abbe condenser*. Condensers of this construction with two lenses have usually a numerical aperture, when employed to their full extent, of 1.20 and may be used with all ordinary dry objectives and with oil immersion objectives. They are designed to be used with the *plane* mirror. In the case of objectives of more than 1.20 N.A., a three or more lens combination condenser giving 1.40 N.A. should be chosen. Condensers used to their full aperture usually so flood the field with light, in the case of dry objectives, as to necessitate lowering them or closing their iris diaphragms or both until only just sufficient light rays are intercepted by the objective to fill its back lens and thus render the fine details of the illuminated object most distinct.

In the diagram, Fig. 9, the passage of the light rays is roughly indicated for a position of the Abbe condenser when used with an objective of low numerical aperture. The iris diaphragm is shown well closed. Usually it is advisable to also lower the condenser. Failure to employ the Abbe condenser in the proper manner or to appreciate the fact that a different adjustment is required to meet different problems, is doubtless responsible for more errors in interpretation in microscopic examinations than any cause other than excessive magnification. Since very few dry achromatic objectives have a high numerical aperture it is evident that in order to obtain the best results it will be essential with all such optical combinations to close the iris diaphragm of the Abbe condenser until the numerical aperture is no greater than that of the objective. It will be found to be a safe general rule to *lower* the Abbe condenser and to *close* its iris diaphragm to a diameter about two-thirds or one-half that of the rear lens opening of the objective. The size of the diaphragm opening may easily be adjusted by removing the ocular, looking into the tube of the microscope and closing the diaphragm until the bright disk of light is reduced one-half or two-thirds.

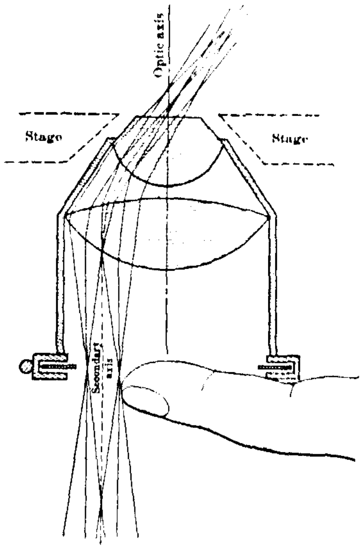

FIG. 10. Diagram of Abbe Condenser; Oblique Light.

Oblique illumination with the Abbé condenser is quickest and most easily obtained by the method suggested by Wright of holding a finger below and half across the opening of the condenser; the light rays then take the path roughly indicated in Fig. 10. Or we may drop upon the swing-out ring attached to the bottom of the condenser mounting a half-disk of black paper or cardboard, or a disk provided with a circular opening

to one side of the center. The disks furnished with the condenser, consisting of a central stop with narrow slots, yield very oblique illumination but a black background, and serve an entirely different purpose which is discussed elsewhere under the head Dark-ground Illumination. In the highest grades of microscopes the substage mounting is arranged so as to provide a lateral movement of the iris diaphragm by means of rack and pinion. Oblique illumination is then obtained by closing the diaphragm to a small opening and racking it to one side.

Oblique illumination is often essential to a proper interpretation of structure and to a sharp differentiation of refractive indices.

The ordinary Abbe condenser is corrected for neither chromatic nor for spherical aberration and although it answers all the purposes of illumination in ordinary microscopy with standard objectives, in photomicrography or in combination with objectives of the highest grade and in work of the finest kind, its use is injudicious. Recourse should be had in such cases to achromatic or specially constructed condensers. Since investigations of this kind are rare in chemical laboratories, space forbids their consideration.

In accurate crystallographic studies the microscope condenser must be especially free from both chromatic and spherical aberration; and instruments for this class of work are never provided with condensers of the Abbe type, but are always fitted with light-concentrating devices of special construction.

It is essential that the optic axis of the condenser shall coincide with the optic axis of the microscope, or, in other words, the condenser must be *accurately centered*. In the low-priced microscopes no provision is made for any adjustment of the mounting, the proper position being fixed by the manufacturer. Not infrequently through carelessness of workmen and inadequate inspection of the finished instrument, microscopes are sold whose substage condensers are so badly out of center as to render them unfit for high grade work.

To test the adjustment of an Abbe condenser in a fixed mounting, close its iris diaphragm to the smallest obtainable opening,

raise the substage as far as it will go; insert a cross-hair eyepiece in the body tube and focus with a very low power upon the diaphragm opening. The diaphragm opening should fall at the center of the field of view directly under the cross-hairs, concentric with their point of intersection. If the image of the opening is not centrally located there is something faulty in the construction of the condenser or in its attachment to the substage, or in the alignment of objective and ocular.

If the condenser has been found centered, we may change to a high power objective and be reasonably sure that the condenser will be centered with respect to the objective, providing a revolving nose-piece is not in use; but if the objective is attached to an ordinary nose-piece, turning from one objective to another usually necessitates a readjustment of the condenser. With high powers, centering, as described above, is impossible and it will be found simpler to remove the ocular and hold a tripod or pocket magnifier over the tube; the image of the diaphragm opening is then easily seen and its relative position ascertained.

In testing for proper centering it is important that the mirror be so placed as to yield exactly axial light. This may be assured by swinging the condenser to one side and placing upon the stage a preparation consisting of thin gum beaten up until full of air bubbles; a very tiny air bubble is selected and brought to the center of the field, it appears as a bright spot surrounded by a black ring; the bubble is sharply focused and the mirror adjusted by proper tipping until the bright spot appears exactly at the center of the circular black ring. The light is now exactly axial. This method of assuring absolutely axial light [1] is the simplest and surest available.

Without touching the preparation or the mirror, carefully swing the condenser back in place, raise it about halfway and slowly raise and lower the body tube by means of the coarse adjustment, closely observing at the same time the appearance of the bubble image. If the light still remains axial with the condenser in place there will be no appreciable swaying of the image and no change of position of the bright spot of light. If

[1] Gage, The Microscope, p. 48, 10th Ed., Ithaca, 1908.

the image sways and the bright spot of light is displaced to one side of the center the Abbe condenser is faulty and the character and the amount of the fault will be indicated by the magnitude of image displacement.

In the better grades of Abbe condensers the mounting is fitted with centering screws, which permit moving the combination of lenses so that the optic axis of the condenser lens becomes coincident with the optic axis of objective and ocular.

The simplest method for easily centering adjustable Abbe condensers is to have a cap made, fitting exactly over the top lens of the condenser; at the exact center of this cap an exceedingly tiny hole is drilled falling in the optic axis of the apparatus. The microscope is focused upon this hole, illuminated by the light transmitted by the condenser and the bright spot seen is brought by means of the centering screws so that its center is coincident with the center of the field.

It is the rule to *always use the plane mirror* with the Abbe condenser; but when the windows of a laboratory have small panes or wide cross bars it is often impossible to properly illuminate an object with the plane mirror and Abbe condenser without projecting an image of the window bars into the field. Either the microscope must be moved very close to the window or the concave mirror must be used; the latter plan necessitates closing the iris diaphragm two-thirds or more and lowering the condenser. In aggravated cases a disk of ground glass may be placed below the condenser or in front of the mirror. The use of a disk of thin, fine ground glass will in fact be found a distinct gain in ordinary practice in the illumination of most objects. By its use softer, clearer and more easily interpreted images will often be obtained and the true colors of objects will be more easily recognized.

When the recognition of colors becomes important, as, for example, in microchemical analysis, the student must remember that the image obtained in the microscope by illumination, by mirror and Abbe condenser with light from the sky will almost never show the true colors present in the object. To obtain a properly colored image, slide a piece of pure white

card at an angle of about 45 degrees between condenser and mirror, or place a disk of ground glass in the ring attached to the lower part of the condenser, thus obtaining, in part, reflected light and a gray or white background.

The ring attached to the lower part of the condenser and arranged to swing aside serves to carry disks of blue glass to be employed when working with artificial light. By this means a much less fatiguing illumination is obtained, and providing the proper intensity of cobalt glass is at hand, white light giving proper color values is secured. Blue glass should always be placed below the condenser when working with yellow artificial lights. Most manufacturers supply blue glass disks with all their Abbe condensers. When the apparatus is to be employed in photography, yellow-green glass disks are furnished to be used as ray filters.

c—d. **Reflected Light, Axial or Oblique,** must be employed for the study of the surfaces of opaque objects or for the purpose of ascertaining the surface configuration of objects of any nature.

In investigations of this sort the preparation may be illuminated either by rays of light whose paths are oblique to the surface of the object and also to the optic axis of the microscope or by rays whose paths are parallel (or approximately so) to the optic axis and normal to the surface of the preparation.

Oblique light rays are obtained either by means of small reflectors attached to the objective or by directing upon the object the rays from a radiant lying above the plane of the surface of the object. When a radiant is employed, as, for example, an arc lamp or a Nernst lamp, a condensing lens is usually interposed between light and object in order to concentrate the light rays and facilitate the proper placing of the illuminating beam. Illumination by a reflecting mirror may be obtained either by means of the mirror of the microscope, provided its swinging arm is long enough to allow raising the mirror above the plane of the stage, or by attaching to the objective a silvered metal paraboloid. The paraboloid illuminator was very popular at one time but has been almost entirely superseded by devices known as vertical illuminators (see page 76) in which the re-

flecting surface is mounted in a cell attached to the microscope just above the objective. In these devices the reflector sends the illuminating beam of light through the objective which acts as the condenser, concentrating the light rays into a bright spot of light upon the surface of the object at a point lying approximately in the optic axis of the microscope. From the surface of the object the rays are reflected back through the objective and form the image of the object in the usual manner.

When only very low powers are required for the examination of a specimen, simply holding it slightly inclined upon the stage will send sufficient light into the instrument to permit a thoroughly satisfactory study of the coarse details. Slight focusing up and down will answer all purposes.

Since reflected axial and oblique light must very frequently be employed by the chemist it is essential that he should thoroughly understand the phenomena exhibited by different surfaces illuminated in different ways.

If we are dealing with a highly polished mirror surface S, Fig. 11 (as, for example, a polished but unetched metallurgical specimen), lying in a plane normal to the optic axis of the microscope, and we illuminate it by reflected light, it is obvious that none of the oblique rays *ab*, *cd* and *ef* can enter the objective to form an image since the angle of reflection is equal to the angle of incidence. The surface will therefore appear *dark*. The more nearly a perfect reflecting surface the object possesses, the darker it will appear. It will remain dark until the ray *ef* becomes almost parallel to the optic axis and therefore practically normal to the surface of S. Reflected light rays now can enter the objective and the surface appears *bright* and shining.

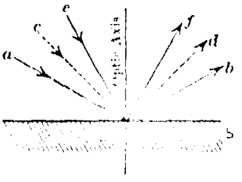

FIG. 11. Path of Oblique Light Rays striking a Plane Polished Surface.

But if the surface of the object illuminated by the oblique rays is irregular or etched, as diagramed in Fig. 12, then the *irregularities* will appear *bright*, the *plane* or *polished* surfaces *dark*. If a light ray *a* strikes a series of tiny minute points as at D, the light will be diffracted; diffraction patterns will be

formed in the field of the microscope and the true structure of the object at this point will prove very difficult of interpretation.

When, however, axial reflected light is used, that is, when the illuminating beam strikes the polished preparation normal to its surface, the *plane* surfaces will appear *bright*, the *irregularities*

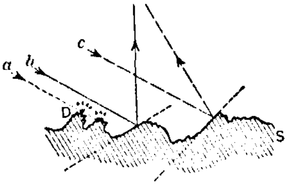

FIG. 12. Path of Oblique Light Rays striking an Irregular Surface.

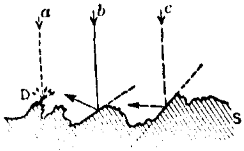

FIG. 13. Path of Axial Light Rays striking an Irregular Surface.

more or less *dark*, and minute projecting irregular points will yield diffraction patterns; for as shown in Fig. 13, the light rays *b* and *c*, striking reflecting surfaces, are turned aside at such an angle as to preclude their entering the objective.

Careful consideration of the above described phenomena is absolutely essential to a correct interpretation of the structure of the material being studied. To determine when one is dealing with depressions and when with elevations when working with moderately high powers and vertical or oblique illumination is often a difficult problem which is further complicated for the beginner by the fact that the image seen is that of the object in a completely reversed position.

It is obvious that the oblique illumination of opaque objects is restricted to low powers, since the free working distance of high power objectives is so small that the path of any pencil of light which will strike the preparation at a point lying in the line of the optic axis of the microscope must then be so oblique as to be approximately parallel to the surface of the preparation.

Light rays reflected from the surfaces of anisotropic crystals are polarized, but are not noticeably polarized if from isotropic crystals. It therefore often proves of great value in qualitative analysis to employ polarized light for the illumination of objects to be studied by means of vertical illuminators.

e. **Dark-ground Illumination** is usually obtained by sending oblique light rays into the preparation from below, at such an angle that no rays directly enter the objective. This is accomplished by introducing a metal stop below the Abbe condenser so as to shut out all central rays and allow only rays near the circumference of the condensing lenses to enter the preparation, or, better, by substituting for the Abbe condenser a device which will reflect rays from a curved surface in such a manner as to bring them approximately to a focus. In preparations thus illuminated objects appear bright upon a black background.

This method is invaluable for demonstrating the presence of very minute bodies or those whose index of refraction is so very nearly the same as that of the medium in which they occur as to cause them to escape detection when illuminated by transmitted light.

It is generally the case that particles of a diameter of one micron or less require dark-ground illumination for their demonstration.

If the obliquity of the rays from the illuminating device is very great, the dark-ground illuminator becomes an "ultra-condenser" and may be employed for demonstrating the presence of particles less than $0.2\ \mu$ in size.

Dark-ground illumination is employed in practice in the examination of blood for the presence of parasitic organisms, in the study of bacteria, in the biological examination of water, in the study of foods, fibers, crystallization phenomena, tiny crystals, submicroscopic particles, colloids, etc.

If the Abbe condenser is to be employed for dark-ground illumination, insert one of the dark ground stops in the ring attached to the bottom of the condenser mounting, open the iris diaphragm to its *full* capacity, and screw up the condenser in its mounting until, when turned in place and the substage is racked up to its highest point, the upper lens will just touch a slide laid upon the stage. A drop of water is then placed between the condenser lens and the preparation to be examined. It is always essential to ascertain the thickness of object slides which yield the best results and keep this value for future refer-

ence. Special dark-ground illuminators are marked by the manufacturers with the thickness of object slide for which they are designed.

The use of an Abbe condenser with dark-ground stop as a substitute for special dark-ground illuminators is not to be recommended since the obliquity of the rays is seldom sufficient to prevent some light from entering the objective. The results usually obtained are likely to be poor and unsatisfactory.

Dark-ground Illuminators are condensers of such construction that very oblique light rays are caused to converge, usually by reflection, and to so strike the lower surface of a cover glass placed over the preparation to be studied as to be totally reflected. To prevent axial light from passing through the illuminator an opaque stop is placed in the optic axis of the device.

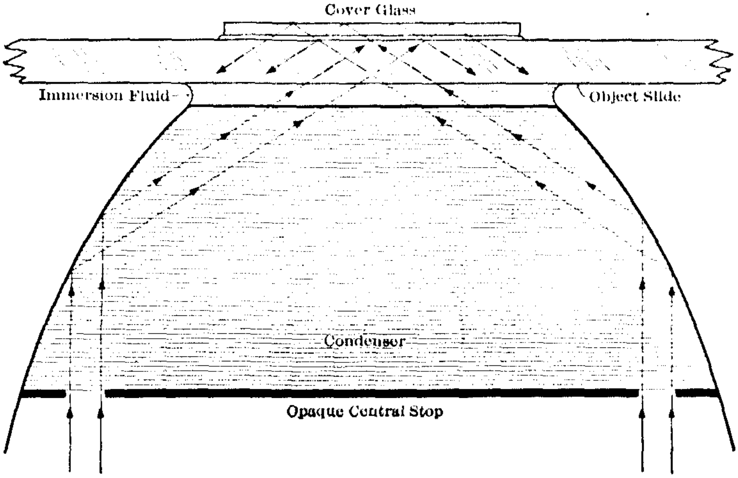

FIG. 14. *Path of Rays in Reflecting Condenser for Dark-ground Illumination.*

The field is therefore black or nearly so, save for a slight halo at its edges, while the objects appear bright or brilliantly colored upon a dark background.

In Fig. 14 a simple paraboloid reflecting illuminator is shown diagrammatically in section, with the directions of the light rays so exaggerated as to make clearer the reason the field of view is dark.

Sections of typical illuminators are shown in Fig. 15, A, B, C, D. It will be seen that although the construction may be different in different types, the rays emerge at approximately similar angles. In illuminators of these types (B, C, D) the curvatures of the reflecting surfaces are ground after mathematically calculated curves which will bring the light rays approximately to a focus at a point upon the cover glass. In the

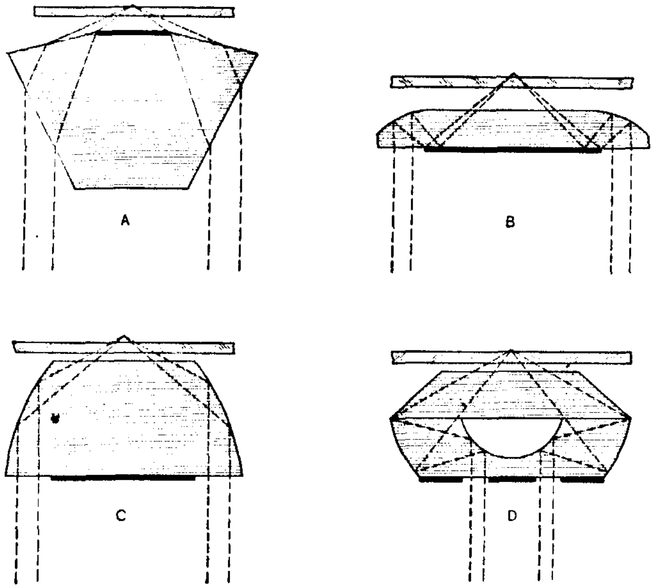

FIG. 15. Types of Dark-ground Illuminators.

A. Nachet et Fils. B. Reichert.
C. Bausch & Lomb. D. E. Leitz.

diagrams for simplicity, cover glasses and preparations have been omitted. The cheaper forms of dark-ground illuminators fail to bring the rays to a true focus and instead of a point of light upon the cover glass we obtain a disk, as shown in an exaggerated manner in Fig. 14.

An exception to the above statement, relative to the construction of reflecting condensers, is found in the Beck[1] dark-ground

[1] Made by R. & J. Beck, London.

illuminator in which, Fig. 16, a lens is combined with a paraboloid to bring the rays to a proper focus.

The Beck illuminator is unique in that it permits adjustment for different thicknesses of object slides, an impossibility with other forms of paraboloid illuminators. This adjustment for slide thickness is accomplished by changing the distance between the focusing lens L and the paraboloid P. As seen in the diagram, the illuminator consists of two parts, the paraboloid mounting screwing into that which holds the lens; therefore raising or lowering the paraboloid will displace the focal point *f* and bring about an accommodation for different thicknesses of slides.

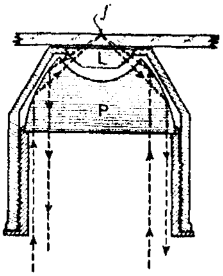

FIG. 16. Beck Adjustable Dark-ground Illuminator.

In practice it is rarely possible to have such accurate grinding that all the rays are properly deflected and none enter the objective. Only those rays included in a low numerical aperture are available. Hence the employment of an objective of high numerical aperture and very short working distance yields a field which is never dark. Since practically all high power immersion objectives are made with as high numerical apertures as possible, it is absolutely essential that some means be used to reduce their numerical aperture below 1, if they are to be employed in dark-ground studies. This is accomplished by introducing into the objective mount some form of diaphragm: or specially constructed objectives of N.A. less than 1 may be purchased. Diaphragms for use with objectives in dark-ground studies are generally supplied by the manufacturers of reflecting condensers for introduction into the special objectives to be used. These funnel-like diaphragms are not interchangeable and can be employed only for the objective for which they are designed. Figs. 17, 18 and 19 show three different types and forms of diaphragms employed for this purpose. In the case of Fig. 17 the lens mounting is unscrewed just back of the back lens combination and the funnel diaphragm, provided with male thread, is screwed into the opening tapped into the upper half of the objec-

tive mounting. In the case of Fig. 18, the objective is also unscrewed just above the back lens combination, but in this case the diaphragm is merely dropped into the hole in the lower half of the mounting, while in the case shown in Fig. 19, the long tubular diaphragm is inserted into the objective from above

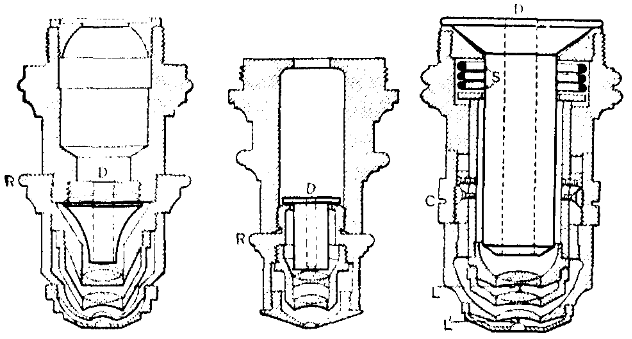

FIG. 17. FIG. 18. FIG. 19.
Methods of Reducing Numerical Aperture of Objectives for Dark-ground Studies. (D, D, D, Removable Diaphragms.)

without necessitating any separation in the mounting of the objective lenses. By means of these diaphragms the numerical apertures of the objectives are reduced to approximately 0.9 or 0.95.

In order to obtain the maximum resolving power with dark-ground illumination Conrady has shown[1] that the condenser must have not less than three times the numerical aperture of the objective. He suggests that the practical resolving power obtainable may be expressed as equal to $\frac{3}{4}$ N.A. objective + $\frac{1}{4}$ N.A. condenser, but Reinberger points out that on actual trial[2] the Conrady formula gives results about 25 per cent too low. The inexperienced observer, however, will find that the resolving power obtainable in his work will conform rather closely with the Conrady formula. It is therefore well to bear in mind that in dark-ground illumination studies fine details of structure are to be discerned only with the greatest difficulty

[1] Conrady, J. Quekett Micro. Club, **11** (1912), 475.
[2] Reinberger, J. Quekett Micro. Club, **11** (1912), 503.

and will require extreme care in adjusting the illumination and in selecting the proper objectives.[1]

It is evident that with a properly selected optical combination, the field of view will appear black or very dark, while any objects present will appear to be bright and self-luminous.

The more oblique the rays the more minute the particles may be whose presence will be revealed by their diffraction patterns. When the upper limit of obliquity is reached the illuminators are usually designated as *ultracondensers* and the instruments to which they are attached are then known as *ultramicroscopes*. There is no sharp dividing line between ordinary dark-ground illumination and ultramicroscopic illumination; the one gradually merges into the other. In all ultramicroscopes we are dealing with dark-ground illumination, but, on the other hand, few dark-ground illuminators yield light rays sufficiently oblique to demonstrate particles of ultramicroscopic

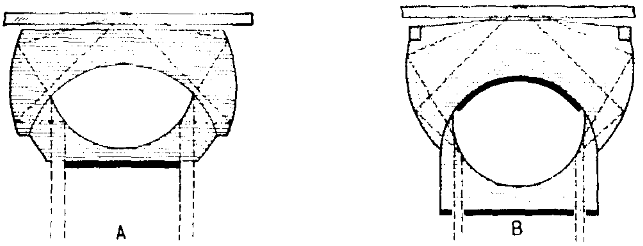

FIG. 20. Types of Reflecting Condensers for the Study of Ultramicroscopic Particles.

size. Typical ultracondensers are shown in Fig. 20. A comparison of the indicated light ray directions in these with those in Fig. 15 will disclose that their inclination is considerably greater. For the chemist the ultracondensers are of far more value than simple dark-ground illuminators and those fitting into the substage will be found preferable to those of plate form,

[1] Siedentopf and Zsigmondy have shown (Ann. d. Phys. [4] **10** (1903), 14) that in the ultramicroscope the brilliancy of the diffraction disks is proportional to the product of the squares of the numerical apertures of the image-forming and illuminating objectives.

e.g., Fig. 21, which lie upon the stage of the microscope. Moreover, all ultracondensers can be employed as ordinary dark-ground illuminators, the only drawback in routine work being that they require more careful adjustment.

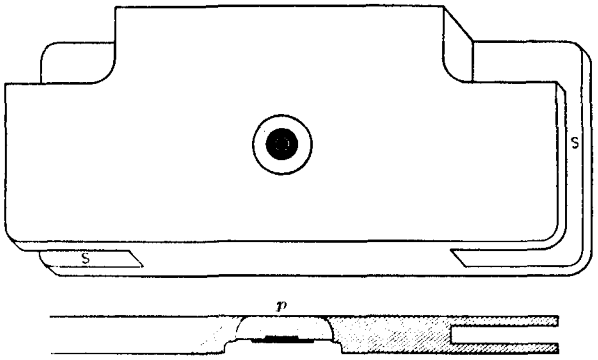

FIG. 21. Simple Dark-ground Illuminator for Use upon the Stage of the Microscope.

The Adjustment of Dark-ground Illuminators for use requires close attention, chiefly, to four conditions: (1) a selection of a sufficiently powerful radiant and the projection of a spot of light large enough to completely fill the lower opening of the illuminator; (2) the employment of objectives having a numerical aperture never greater than 1.0; (3) the use of object slides of the thickness for which the illuminator has been designed; (4) accurate centering of the illuminator with respect to the optic axis of the microscope.

An examination of the diagrams (Figs. 15 and 20) will show that theoretically the oblique rays meet to form a tiny spot of light just outside the apparatus in the line of its optic axis. It is obvious that this spot should lie in the optic axis of the objective and the ocular. In order to facilitate centering, a tiny circle is usually engraved upon the upper surface of the glass of the illuminator; this circle is focused with a low power and is brought to the center of the field of the microscope, either by means of centering screws *c*, *c*, Fig. 22, provided for this purpose, or is moved by the fingers when a stage illuminator, Fig. 21, is placed upon the stage. If the microscope is provided with

a revolving nose-piece the objective used in centering should be removed and the high power to be employed in the dark-ground studies substituted in the same opening in order that there shall be no change in the relations of the optic axes. When employing ultracondensers of the highest type it is better to remove the nose-piece and to attach to the body tube a centering adapter into which the objective is screwed; this permits accurate centering of each objective used and therefore much better optical conditions are obtainable.

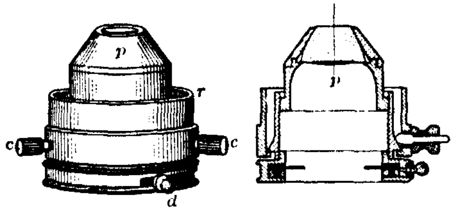

FIG. 22. Paraboloid Dark-ground Illuminator for Use below the Stage.

In order, however, that the objective may be centered, it is essential that we have a central fixed point upon the stage to which we may refer. Stands to be employed for high-grade ultramicroscopic work should be provided with mechanical stages with graduated coördinate motion and a centering object slide, carrying at its center a tiny cross. When placed upon the stage so that the different scales of the mechanical stage occupy the positions which the manufacturer has indicated upon the object slide, the point of intersection of the ruled cross will fall exactly in the axis of the tube of the microscope. The objective is focused sharply upon the cross and if the center of the cross does not fall in the center of the field it is brought there by moving the screws *a*, *a*, Fig. 24, page 59.

If the condenser is not provided with an engraved circle upon its upper surface it may be centered by placing an object slide upon the stage with immersion fluid, usually water, between it and the condenser; the light spot from the radiant is next properly adjusted and the mirror inclined until a bright spot of light appears upon the object slide. The condenser is raised or lowered

until the spot of light attains its smallest size. Focus upon this tiny spot with a low power objective; if the condenser is properly centered the spot will lie at the center of the field. Should it lie to one side, bring it to the center by means of the centering screws or center the objective with respect to the point of light.

Having adjusted the condenser, the next step, if the device is of the cardioid type (see page 67), is to ascertain whether the quartz cell, which must be used with the instrument, is in proper condition for use. Lay the quartz cover upon the cell and press it down very carefully. Notice whether there appears at the zone of contact between cell and cover a series of colored concentric rings. If the pattern does not consist of concentric circles, but appears to be elliptical, it is probable that the cell is not level with respect to the optic axis. Adjust the level screws until the plane of the cell is normal to the optic axis. If the eccentricity of the rings does not disappear, the trouble lies in the objective which is not corrected for the thickness of the cover of the cell being used.

A powerful source of light is essential. Direct sunlight by means of a clockwork heliostat is ideal but seldom available. The next choice is an electric arc of 4 to 5 amperes or more, for ordinary dark-ground examinations, and of 15 to 20 amperes for ultramicroscopic studies of colloids, etc. Useful types of radiants will be found described on page 132.

The more powerful the radiant the smaller the particles which can be demonstrated. Siedentopf estimates that direct sunlight will reveal the presence of particles whose diameters are one-thirtieth of that of the smallest appreciable with the ordinary arc lamp.

Since the light rays enter these reflecting condensers through an annular space, there being an opaque stop at the center, it is obvious that the spot of light reflected from the mirror of the microscope must have a diameter slightly greater than this space, otherwise the illuminator will not properly function; for this reason, before placing the illuminator in position for centering, it is always essential to examine its lower surface and ascertain the diameter of the spot of light necessary to completely

fill the annular entrance space. The radiant and a suitable condensing lens are then so placed as to yield parallel rays and produce a spot of light of the proper size and intensity at the center of the plane mirror of the microscope, the mirror being so inclined as to reflect the light rays into the dark-ground illuminator. Dark-ground illuminators require that an immersion fluid be placed between them and the object slide. Usually freshly filtered water is sufficient, although homogeneous immersion oil sometimes yields better results, especially with illuminators of the plate type.

In applying the immersion fluid and laying the object slide in place great care must be taken to prevent the entrance of air bubbles or dust particles.

Because the light rays are caused to emerge from the illuminator at such an angle (determined by the inclination of the reflecting surfaces) as to converge to an axial point lying just above the plane of the object upon the object slide, it is, of course, essential that the thickness of the object slide be known, for if too thin the illuminating rays will meet too far above the material to be studied, or if too thick the focal point will lie too low; for these reasons optical instrument makers mark upon the devices the object slide thickness to be employed. For example:

	Thickness of object slide.
Bausch and Lomb paraboloid illuminator	1.40 to 1.55 mm.
Zeiss paraboloid condenser	1.0 to 1.10 mm.
Reichert reflecting condenser	0.7 to 1.10 mm.
Reichert slip-in reflecting condenser	2.0 mm.
Leitz reflecting condenser	less than 1 mm.
Zeiss cardioid condenser for quartz cell	1.2 mm.

Absolutely clean object slides and cover glasses are essential and great care must be exercised in wiping off the immersion fluid from the condenser to avoid scratching the glass. Lens paper of the highest grade only should be employed, and the wiping off of the fluid should be done with the least pressure possible, otherwise fatty material from the fingers may be forced through the pores of the lens paper upon the glass. A mere

trace of grease upon the glass surface will lead to the formation of air bubbles, or will prevent optical contact if water is the immersion fluid.

The preparation to be studied must be thin and must be covered with exceptionally clean and very thin cover glasses. Covering the preparation with a cover glass is essential.

In order to expedite the adjustment it is well to have at hand a permanent slide of some material which yields good results with dark-ground illumination, as, for example, diatomaceous earth. With such a preparation on the stage the radiant, microscope mirror and the condenser are all so mutually arranged as to yield the best illumination of the diatoms; the final adjustment is then made by raising or lowering the condenser. The test slide may now be replaced by the preparation to be studied. Little change, if any, should be required to give the most satisfactory results. If material of unknown structure or composition is placed upon the stage without a prior examination of material of known behavior much time may be lost in attempting to interpret anomalous appearances due to improper illumination.

Owing to the exceedingly complicated diffraction patterns often obtained with dark-ground illumination great difficulty may be experienced in arriving at a correct explanation of the phenomena observed, and it is only after study of materials of known structure that it is safe to proceed to examinations of somewhat similar material of unknown structure.

f. **Orthogonal Illumination** is a term applied by Zeiss after Siedentopf and Zsigmondy to an arrangement of radiant, condensing lenses and tiny slit such that the light rays enter the preparation at *right angles* to the optic axis of the microscope. The presence of particles is thus indicated by the light diffracted from them, the particles themselves remaining invisible and only the diffraction patterns, which may be relatively large, are seen in the field of view. This mode of illumination, as well as that by exceptionally oblique rays, given above under *e*, applied to microscopic examinations gives us instruments commonly called *ultramicroscopes*.

Orthogonal illumination is employed in the study of colloids and other particles in suspension in liquids and for the study of particles in transparent or translucent solids, such as glass, etc. For details as to apparatus and their use, see page 57.

g. **Differential Color Illumination** by the method of Rheinberger[1] may be obtained by substituting for the dark-ground wheel stop of the Abbe condenser colored disks of transparent material, using a darker color for the central portion and surrounding this disk with an annular ring of a lighter and strongly contrasting color. The object will then appear strongly illuminated, but colored upon a colored background. If, for example, the central disk is blue and the ring red, the objects will appear red upon a blue background. With care and a suitable choice of colors, very remarkable results may be obtained which may greatly facilitate the study of certain sorts of material.

h. **By Means of Ultraviolet Light.** — When ultraviolet rays impinge upon certain substances they become fluorescent and glow with violet, red, green or bluish light. The color of the fluorescence is peculiar to the substance. Since comparatively few bodies exhibit this phenomenon and since the color is a further aid in differentiation, advantage has been taken of this property of bodies as a means of identification of such substances not readily recognized when present in low per cents in mixtures. To permit the extension of this method to minute amounts of material the "Fluorescence Microscope" has been constructed.[2]

Ordinary glass is practically opaque to ultraviolet rays but not to the light rays resulting from the fluorescing of the substance; the ultraviolet rays however readily penetrate quartz. We have, therefore, only to substitute quartz for glass in the condenser in order to concentrate the ultra rays on the object upon the stage. It follows from this that although the illuminating devices must be of quartz, as also the object slide upon which the object lies, the objective and ocular may be those ordinarily employed.

[1] J. Roy. Micro. Soc., 1896, 373; Spitta, Microscopy, London, 1909; 175–178.
[2] Made by C. Reichert, Vienna, Austria.

CHAPTER IV.

ULTRAMICROSCOPES.

APPARATUS FOR THE STUDY OF ULTRAMICROSCOPIC PARTICLES.

Ultramicroscopes. — Attention has already been called to the fact that the compound microscope with transmitted axial light will resolve tiny particles in suspension in a liquid only when there is a certain appreciable difference between the refractive index of the particles and that of the liquid, and when the diameters of the particles are greater than half the value assigned to the shortest wave lengths producing the effect of light upon the normal human eye. We have also seen that if instead of axial light, oblique rays are employed the ability to discern minute particles and intricate structure is greatly increased, especially if the obliquity of the rays is such as to yield an illuminated object upon a black background. If the degree of inclination of the illuminating rays be still further increased and the source of the rays a powerful radiant and the objective employed one of low numerical aperture, only light diffracted by the object will enter the objective; the phenomenon known as the "Tyndall effect" results, so familiar in the scintillating dust particles visible when a ray of sunshine enters a tiny opening in a darkened room or cell. The existence of these infinitely minute particles in suspension in the air is manifest to the naked eye through that phenomenon, although even a high-power microscope fails to resolve them. The ultramicroscope is merely the adaptation of this Tyndall effect to microscopic illumination. As a result, the existence may be demonstrated of particles almost one thousand times smaller than is possible by means of the most powerful instrument employed in the usual manner.

It is obvious that under the illumination of these very oblique rays, light alone which has been diffracted or reflected by the

particles enters the microscope and eventually the eye of the observer, and that therefore he never sees the particles themselves, but merely a diffraction disk of light. We know of the existence of these particles through the same manifestation of more or less scintillating points of light that we see in the fixed stars on a moonless night. As hereinbefore stated the image of a point of light is a diffraction disk surrounded by alternate dark and bright rings. These diffraction disks appear to be in rapid motion. They appear to spin, to expand or contract and are endowed with a constant vibratory movement. This is due to the fact that exceedingly minute particles suspended in a liquid exhibit a constant vibratory and rotatory motion, long called the Brownian movement and now known to be associated with and a manifestation of what we commonly term molecular vibration or bombardment. The presence of disintegrating or so-called "digestive" colloids increases the Brownian motion, while electrolytes by reason of their causing agglutination tend to decrease the amplitude of the paths of vibration.

In the few years that ultramicroscopic research has become possible a large number of investigations have been made upon the amplitude of the paths of vibration of the finest of these infinitely small suspended particles, with the result that the measurements made agree very closely with the theoretical values computed for the amplitudes of vibration of the molecules. Agencies which increase molecular vibration, such as heat, dilution and consequent reduction of viscosity, increase the *Brownian movement. Hence, we find under the ultramicroscope* the suspended particles in a gas (as, for example, in smoke) in much more rapid motion than in a liquid, while in a solid the Brownian movement is visible only with the greatest difficulty.

Since the tiny particles in suspension are being bombarded on all sides, the motion imparted to them must be the resultant of the forces acting; we therefore find them spinning rapidly as well as moving to and fro. Some authors have even suggested that the term kryptokinetic motion be assigned to the rotatory movement to distinguish it from the oscillating Brownian vibration.

The amplitude of the Brownian movement may be ascertained by means of a net ruled eyepiece micrometer calibrated in the usual manner. Space forbids a discussion of the experimental details.

(*Note.* The student should read the excellent summary of the then known facts relative to the Brownian movement given by Rutherford in *Science*, **30** (1909), 289–302.)

The light emanating from the particles is polarized, the intensity of polarization increasing with the decreasing size of the particles. This fact enables us to differentiate between light diffracted by the particles and light emanating from fluorescent bodies, since fluorescent light is not polarized. A well-equipped ultramicroscope must therefore include a device for the projecting of polarized light into the preparations and an analyzer for the study of the light rays forming the image in the microscope. But it must be remembered that even in the highest developed types of the ultramicroscope tiny particles in suspension are discernible only when the refractive indices of these particles are different from that of the medium in which they are suspended; otherwise, no light will be diffracted from them. Therefore, although a medium may appear to be "optically empty" when viewed in the ultramicroscope, it by no means follows that there are no so-called "colloids" in suspension. To meet this difficulty and to extend the range of the ultramicroscope, W. Ostwald[1] has suggested that monochromatic light be employed. This suggestion is based upon the fact that although two substances may have an identical value for their refractive indices for white light, with light rays of certain definite wave length the indices may be sufficiently different to permit the illuminating rays to render the tiny particles manifest.

To the smallest particles visible in the ultramicroscope the terms micellæ, ultramicrons or submicrons are sometimes given. Particles still smaller and therefore invisible in the ultra-microscope are called amicrons.

The earliest practical instrument may be said to be the *Slit*

[1] Ostwald, W., Zeit. f. Ind. Kol., **11** (1912), 290.

Ultramicroscope of Siedentopf and Zsigmondy. At first sight this instrument might be thought to be also the most efficient, in that the path of the illuminating rays entering the object cell is at right angles to the optic axis of the observing microscope; but it must be remembered that owing to internal reflections and the impossibility of obtaining a perfectly black background the field is never sufficiently black to render very feeble diffraction evident. This failure to obtain a black background is due, as first stated, to internal reflection on the one hand and upon the other, to the fact that the beam of light entering the cell is usually of such a diameter that when the objective is focused upon it there is always a plane below that in focus which contains bright particles. Moreover, this trouble is aggravated for the reason that it is essential to use objectives of long working distance and great penetrating power. These difficulties are largely eliminated in the more recently perfected ultracondensers of the dark-ground illuminator types, since in these devices not only is the background blacker but the light entering the liquid under observation is greater in quantity. For example, in the cardioid condenser,[1] the makers estimate that its light-concentrating power is approximately twenty times that of the slit ultramicroscope.

In spite of this advantage of the ultracondenser to demonstrate the presence of particles in suspension greatly beyond the limit of instruments of the slit type, preference should be given to the latter form for general use in the chemical laboratory when only a single type of instrument can be purchased, because of the fact that the slit microscope is universal in its application, serving equally well for solids, liquids, gases or vapors, and for hot or cold preparations, while the reflecting condenser types are confined to the study of thin films of liquid at room temperature (or in certain restricted cases to the study of tiny transparent fibers).[2]

The Slit Ultramicroscope consists of an ordinary compound microscope, a special cell of black glass with small windows at

[1] Made by Carl Zeiss, Jena.

[2] Gaidukov, Zeit. angw. Chem., **21**, I (1908), 393.

right angles to one another and an illumination device for projecting a tiny beam of light into the cell in a line at right angles to the optic axis of the microscope. The tiny beam of light is obtained by means of small projection lenses and an adjustable slit. To distinguish this type of illumination from others commonly employed in microscopy, the term "orthogonal illumination" has been proposed. It is obvious that in this system no direct light can enter the objective but only such rays as are diffracted by the particles in suspension in the liquid contained in the cell.

The form and arrangement of the component parts of the slit ultramicroscope naturally differ according to the optical firm manufacturing the instrument. One of the best known and most frequently used types is that shown in Fig. 24.[1] This instrument consists of an optical bench B, at one end of which is placed an arc lamp R and at the other a compound microscope. Between the lamp and the microscope there are a series of condensing lenses and an adjustable slit. The light rays emanating from the arc are collected by the spherically and chromatically corrected lens C_1 of 80 millimeter focus, so placed as to project a very bright image of the crater of the arc upon the slit S. In ordinary use this slit has its length in a horizontal position, the width being controlled by the micrometer screw with graduated head G, while the length of the slit is regulated by the screw *s*. After passing through the slit the light rays enter the lens C_2, having a focal length of 55 millimeters, whose function is to project a reduced image of the slit into the condenser-objective C_3. Since both slit and lens C_2 are movable forward and back upon the optical bench, the lens C_2 serves a double purpose, projection and adjustment of the magnitude of the light beam entering C_3. The objective C_3 projects into the preparation contained in the cell of black glass U a tiny conical beam of light at right angles to the optic axis of the microscope M. To prevent any side light from entering the preparation, lenses C_1 and C_2 are small and are mounted in blackened metal screens; as a further precaution a large metal screen D with tubular

[1] Manufactured by Carl Zeiss, Jena.

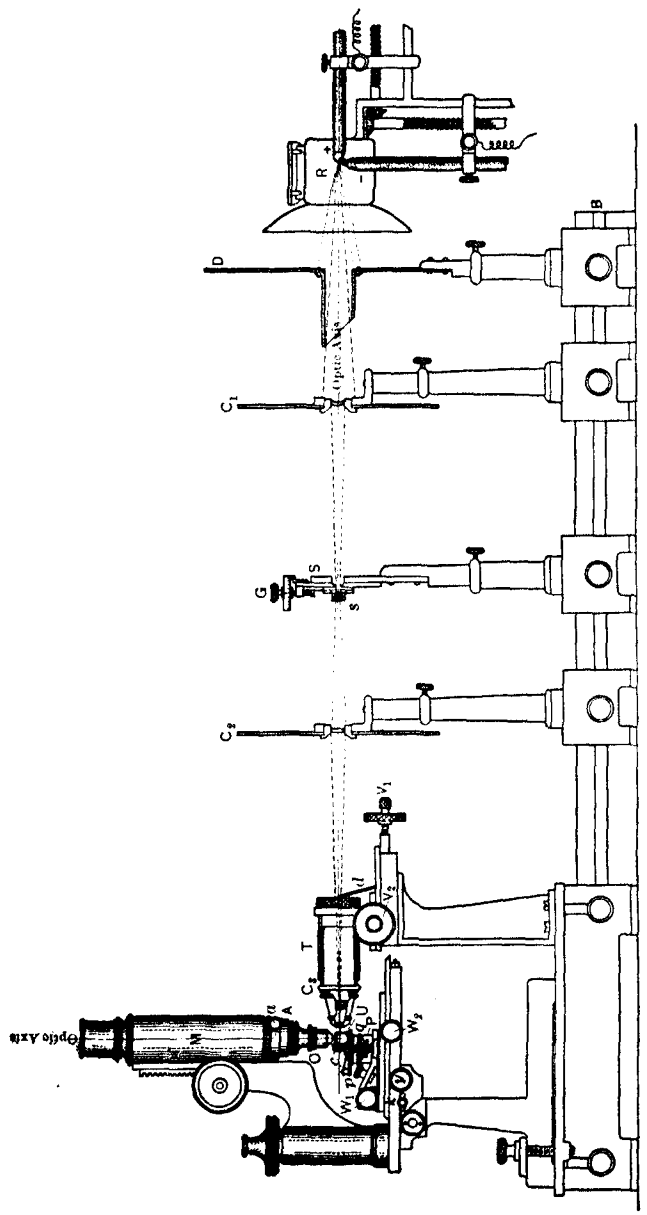

FIG. 24. The Slit Ultramicroscope.

opening or adjustable diaphragm is introduced between the radiant and C_1. The objective C_3 screws into a tube fitting into the sleeve T and may be slid forward and back for coarse adjustment. A very sensitive forward and back movement is further provided by the fine adjustment screw V_1. A second fine adjustment to the right and left for accurately centering the illuminating cone of light is obtained by the screw V_2. By means of these two screws it is possible to adjust the tiny beam entering the material to be studied, in such a manner as to ensure the focal point of the condensing objective C_3 falling in the line of the optic axis of the observing microscope M, and therefore have the whole of the tiny beam lying across the exact center of the field of view.

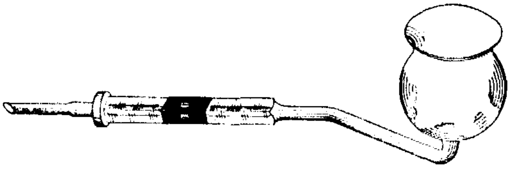

FIG. 25. Biltz Cell.

To the lower end of the body tube of the microscope is attached an adapter A with centering screws *a*, *a*, providing a device for accurately centering the objective O (see page 47).

The liquid containing suspensoids is conveniently placed for examination in a Biltz cell, Fig. 25, or, when the short piece of

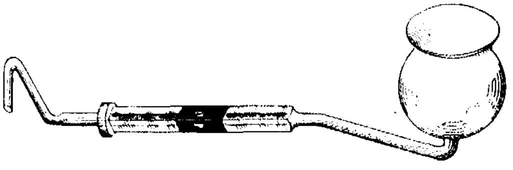

FIG. 26. Biltz-Thomae Cell.

rubber tubing which is attached to the end of the tube is objectionable because of its possible action on the colloids, a Biltz-Thomae cell, Fig. 26, may be substituted. In both of these cells the essential feature is the central dark glass chamber of

about 3 millimeters internal diameter, provided with two small windows at right angles to each other — these two windows consist of either thin glass or, better, of very thin quartz disks cemented in place. The passage of the beam of light through one of these cells is shown in the diagram, Fig. 27. No light other than that diffracted from the particles in suspension in the liquid can enter the observing microscope. The cell is usually attached to the microscope objective by a special cell holder;

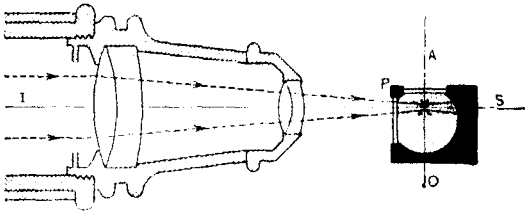

FIG. 27. Illuminating Rays in the Cell of the Slit Ultramicroscope.

this, however, is open to the serious defect of difficulty in focusing and that cells purchased at different times are not exactly of the same thickness of wall, and hence the center of the upper window will not fall in the optic axis of the microscope. For these reasons the author prefers to support the cells upon an elevating mechanical stage P, as shown in Fig. 24. This arrangement permits the shifting and easy adjustment of the cell, so that its upper window is exactly centered with respect to the optic axis of the observing microscope. The cell is held in place by the spring clips *c*. The stage supporting the cell U may be raised and lowered by means of a knurled nut *q*. The nut *p* clamps the stage in place while the screws W_1 and W_2 serve to move P forward or back and to the right or left.

One of the most serious defects of the Biltz cell is the difficulty of properly cleaning it after use, especially when there has been deposition of a colloidal film upon the windows. Treatment with a proper solvent and long washing is imperative. Before introducing a liquid for examination it is always best to pour a little alcohol through the cell and to follow this with the alcoholic solution to be studied, or if aqueous suspensions are to be

employed, displace the alcohol with distilled water free from all fatty or greasy matter and then introduce the colloidal solution. This process is usually essential in order that the liquid to be examined shall come into perfect contact with the windows of the cell with no interfering film and no air bubbles.

A much cheaper and simpler cell is shown in Fig. 28.[1] It consists of a tube of black glass with central swelling and windows at right angles to each other. These windows are either of glass or of quartz, the latter being preferable, since glass is slightly fluorescent. For use, two pieces of rubber tube are attached as shown by the dotted lines. These little cells give excellent results with gases and vapors and may also be employed for the study of such solutions as will not be affected by contact with rubber. For preliminary examinations they are far more convenient than the Biltz cell and like it can easily be held in place on the type of stage shown in Fig. 24 by thin metal clamps or rubber bands. Moreover, these cells are more easily cleaned and are relatively inexpensive.

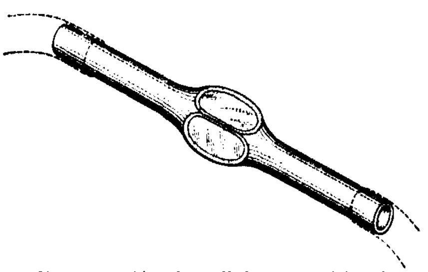

FIG. 28. Simple Cell for Use with Slit Ultramicroscopes.

When solids are to be examined, as, for example, specimens of glass, it is important that there be two sides of the preparation which meet at as nearly right angles in as sharp an edge as is possible. The reason for this will readily be understood by refering to the diagram, Fig. 29. If the sides do not meet in a sharp edge as shown at *a*, but form an obtuse angle or rounded edge *b*, the beam of light must be lowered below *b*. If this is done, the beam of light R will lie too low to be focused, even if the lower lens of the objective is brought into actual contact with the upper surface of the object. In this case the beam lies beyond the working distance of the objective. Should we attempt to bring R within the range W, as indicated in the lowest

[1] Made by E. Leitz, Wetzlar.

diagram, diffraction, refractions, reflections and dispersions take place of such characters and to such degrees as to render the detection of micellæ impossible.

No suggestions as to optical combinations or size and intensity of the illuminating light beam may be given which will be applicable to all materials. As in all other cases of microscopic investigation, the proper conditions must be experimentally ascertained for each preparation examined, but it is a safe rule to always avoid too large a slit and too high a magnification.

For the slit ultramicroscope as made by Zeiss two objectives are specially constructed, a dry 7 millimeter, 0.4 N.A. achromatic objective for the study of solids, and a 4.4 millimeter water immersion of 0.75 N.A., for use with cells containing solutions. A good general outfit should include oculars, 1, 6, 8, 12 and 18.

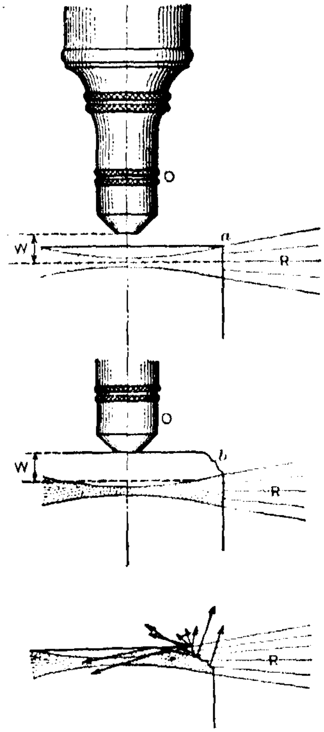

FIG. 29. The Necessity of having Two Sides at Right Angles in the Object for Ultramicroscopic Study.

When polarized light is necessary in the study of colloidal reactions a nicol prism as polarizer mounted upon a saddle stand is placed between the lens C_1 and the slit S. The analyzer is then placed as usual above the ocular of the microscope M.

To adjust the illuminating beam of light used with the slit ultramicroscope shown in the diagram, screw the condenser-objective C_3 into its holder T. Place the projection lens C_2 at about 10 to 12 centimeters from the end of T, place the adjustable slit approximately 12 centimeters from C_2, the projection lens C_1 about 12 to 15 centimeters from the slit, the dia-

phragm D 12 to 15 from C_1 and the arc lamp so that its carbons are about 8 centimeters from D. Turn on the current adjusting the rheostat so as to employ a current consumption of approximately 10 amperes and see that the + carbon is the horizontal one. Later when in the prosecution of studies raise the current to one of 15 or even 20 amperes. Move the lens C_1 backwards and forwards, at the same time holding a piece of dull black glass, dull black paper, or a piece of ground glass in front of the slit, until a position is obtained which projects an image of the arc of maximum brightness upon the black screen and of such a size as to completely fill the slit opening. Set the slit so that the micrometer screw G is up as shown in the figure, and adjust the opening to about 1 millimeter by 1.5 millimeters, its length being horizontal. Now hold a black screen against the end of T and move C_2 back and forth until a very bright and sharp image of the slit is obtained, adjusting C_1 again slightly if necessary. Next hold the black screen so that its surface lies in the plane of the optic axis of the observing microscope and adjust the objective C_3 so that a very bright, uniform spot of light a little less than 1 millimeter in diameter is obtained. Turn the fine adjustment V_2 until the spot of light falls in the optic axis of M. For the final adjustment of the apparatus the cell may be filled with a liquid which contains colloids yielding brilliant diffraction patterns or with a slightly alkaline solution of fluorescein. The path of the illuminating beam is thus easily seen. Focus upon it, using a low power objective and No. 1 eyepiece and by means of V_1 and V_2 adjust the beam so that it passes through the center of the field as a narrow thread of light with its minimum diameter at the center of the field. Replace the material employed for adjusting by the substance to be studied. The only adjustment which should now be required will be the diameter of the slit; if there appears to be required a marked change in slit diameter it is probable that following this change there may be required slight changes of V_1 and V_2.

If the beginner will proceed as indicated little difficulty will be experienced in adjusting the slit ultramicroscope for use. The most annoying feature is the change in the position of the

crater of the electric arc, and consequently unequal illumination of the slit results or there is a failure (due to a flickering arc) of the spot of light to remain centered upon the slit. Holding the black screen against the lens C_2, on the side toward the slit, from time to time, will show when the arc needs adjusting, since there should appear a spot of light of uniform intensity and in the proper position to fall concentric with the optic axes of C_1, C_2, C_3.

When dealing with exceedingly fine colloidal particles it is often an advantage to cut off the lower half of the beam by means of a screen mounted upon a saddle stand and placed between S and C_2, the upper horizontal edge of the screen being raised so as to cut off the lower half of the beam of light. Approximately as good results may be obtained more easily by laying against the end of the tube T a small rectangular piece of black hard rubber or blackened brass *d*, as shown in the diagram.

Reflecting Condenser Ultramicroscopes consist of highly perfected dark-ground illuminators applied to ordinary microscopes provided with special objectives of low numerical aperture. In the special condensers used, the light rays are reflected from two spherical surfaces. The illuminating rays therefore enter the preparations with obliquities greater than in ordinary dark-ground illuminators and are brought to a correct focus.[1]

By employing objectives of low numerical aperture (about 0.85) we have rays including only a low range of apertures taking part in the formation of images, although the illuminating rays include a range of high aperture, 1.1 to 1.35. There is thus obtained the greatest brilliancy of image upon the darkest of backgrounds.

Although many different ultracondensers are obtainable, space forbids a consideration of more than two types: the cardioid condenser of Siedentopf as made by Zeiss, and the ultracondenser of Jentzsch as made by Leitz.

[1] In the ordinary paraboloid condensers, when properly constructed, the light rays are also brought to a focus, but the focal length varies from zone to zone, hence we have an overlapping of images at the center. (Zeiss, "Mikro" Circular 306, p. 8.)

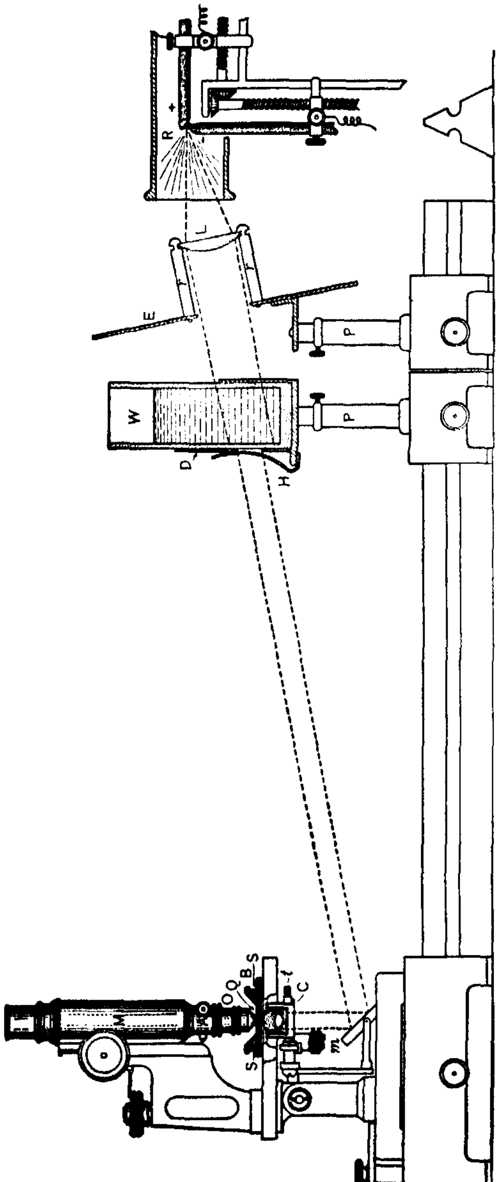

FIG. 30. The Cardioid Ultramicroscope.

The Cardioid Ultramicroscope consists of an ordinary compound microscope M, Fig. 30, into whose substage ring the cardioid condenser C is introduced and held in place by the clamping screw *t*. A thin film of the liquid to be examined is contained in a special quartz cell Q which in turn is held in position upon the stage in a cylindrical brass mounting B. This mounting may be leveled or slightly adjusted in height with respect to the condenser by means of the screws S. The objective O of the microscope must be specially corrected for use with the quartz cell cover and must have a numerical aperture of less than 0.9. This latter requirement is accomplished by introducing into the objective a funnel diaphragm. As set up for use, the cardioid condenser receives substantially parallel rays from the microscope mirror *m*. The source of these rays must be some powerful radiant, most conveniently an arc lamp R. Parallel rays are obtained by means of a plano-convex lens L mounted by means of short brass bars *r*, *r*, three in number, attached to the metal screen E. A glass cell W filled with water acts as a cooling trough. A black cardboard or metal diaphragm D serves to cut down the light beam to the proper size for just filling the aperture of the condenser. For convenience in adjustment as to distance and height, microscope, cell and lens

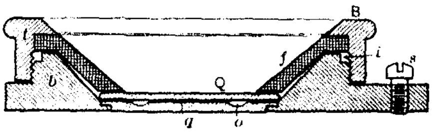

FIG. 31. Cell for holding Liquids for Study with the Cardioid Ultramicroscope.

are placed upon adjustable stands with saddle base resting upon an optical bench of triangular section. The screen E is tipped at such an angle as to project the rays from R upon the properly inclined mirror *m*, when the latter is at a distance of approximately 60 centimeters from the lens L. The crater of R should be about 8 centimeters from L.

The liquid to be studied is placed in a quartz cell Q, Fig. 31, consisting of a grooved quartz disk and cover. With the cover

in place the liquid forms a thin film *q*, the excess of liquid being forced into the groove *o*. The quartz cell is held in position upon the stage of the microscope by means of a brass chamber B consisting of a bed-piece into which the cell fits, a funnel shaped section *f* pressing gently upon the quartz cover, and a top section *t* screwing down upon the section *f*. When much work is to be done with this device it is best to have all the screw threads but three turns cut from the bed-piece and a slight recess cut as shown at *i*. This permits a rapid removal of *t*, and *f* is easily lifted out. As furnished by the makers *f* is flush with the threads of the bed-piece *b* and being smooth with no milling is hard to remove. A small pin in *f* fitting into a hole in *b*, not shown in the diagram, prevents *f* from turning when *t* is being screwed down.

It is absolutely essential that both cell and cover be ***absolutely clean*** and free from all dust particles. Unless so clean that when the cover is laid upon the cell and very gently pressed Newton's rings can be seen the device is unfit for use. To prepare Q for use wash very thoroughly both pieces, immerse in hot chromic-sulphuric cleaning mixture, rinse with distilled water, follow by *purified* alcohol, and dry in a current of warm air, next support upon a loop of platinum wire and heat to a bright red in a Bunsen burner. As soon as the pieces are cool, lay in place in B, and use them at once. When employing the quartz cell and cardioid condenser, never use anything but water as immersion fluid between condenser and cell.

Use only sufficient liquid to form a thin layer *q* and not quite fill the groove *o*.

The objective must be centered by means of the adapter A (Fig. 30), so that the bright spot of light formed in Q will fall in the center of the field.

Always raise or lower the cardioid condenser so as to ascertain the proper position for the blackest background and brightest diffraction images.

See that the beam of light from the radiant falling upon the mirror of the microscope is of sufficient diameter to fill the aperture of the condenser.

Use an arc of not less than 15 amperes.

In the absence of an arc lamp use a 400-watt Mazda lamp with concentrated filament. Or if gas alone is available, employ an inverted Welsbach incandescent mantle or even better an acetylene light.

Be sure that the reflecting condenser is high enough in its mounting to just touch the object cell upon the stage. Substage ultracondensers are usually screwed into their tubular mountings and are easily turned up or down to permit of their accurate adjustment.

The cardioid ultramicroscope is restricted to the study of liquids, to the search for bacteria not readily demonstrated by the paraboloid condenser and to the examination of thin textile fibers, and such other thin semitransparent and flexible solid fragments as will permit pressing out flat, and whose thickness will then be no greater than the thin liquid film of the medium in which they are immersed.

Cotton and Mouton's Ultramicroscope[1] consists of a special prism consisting of a rectangular prism of glass having an inclined face. This prism is laid upon the stage of the microscope and serves for the projection of an oblique beam of light into the preparation placed upon its upper surface. The diagram, Fig. 32, will make clear the construction and the method of using. The prism P, 8 to 10 millimeters high, which converts an ordinary compound microscope into an instrument for the study of ultramicroscopic particles, rests upon the stage S. The liquid L, to be studied, is placed upon an ordinary glass object slide *s* and covered with a thin cover glass *c*. A drop of homogeneous immersion oil is placed upon the top of P, and the preparation is

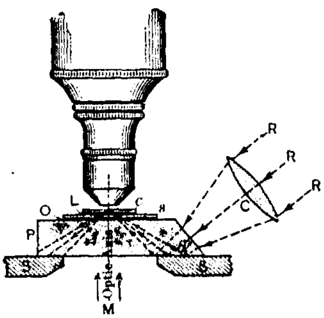

FIG. 32. The Ultramicroscope of Cotton & Mouton.

[1] Cotton et Mouton, C.r., **136** (1903), 1657; Les Ultramicroscopes, Paris, 1906; J. Roy. Micro. Soc., 1903, 573; Lemanissier, Corps Ultramicroscopiques, Thèse, Paris, 1905, 21.

carefully laid thereon, avoiding all dust particles and air bubbles. This thin film of oil O brings about an optical homogeneity between prism and slide. By means of a condensing lens C of about 15 centimeters focus the rays RRR emitted from an arc lamp as radiant are projected into the prism through the inclined face, the inclination θ of this face being approximately 51 degrees. These rays are totally reflected and are brought to a focus at the upper surface of the glass cover at the angle of total reflection. Any particles in suspension in the liquid will diffract the light and diffraction disk images will be formed in the microscope. No other light can enter the instrument and we therefore have the theoretical conditions necessary for the demonstration of ultramicroscopic particles, namely, the particles become luminous upon a black background, the illuminating rays being of high aperture while the image-forming rays are of low aperture.

The adjusting of the illumination in this device consists in ascertaining (*a*) the proper inclination of the rays entering the prism, and (*b*) the correct distance of C from P, so that the focal point will fall in the proper plane. This adjustment requires considerable care and should first be undertaken by means of some preparation of a colloidal metal (silver, for example), and after having obtained the optimum conditions in this manner, the preparations to be studied are then substituted for the test object.

This type of ultramicroscope is applicable only to the examination of liquids. With proper care in adjustment it will yield results fairly comparable with the slit ultramicroscope.

In many types of investigation this device possesses a very desirable feature, namely, that of permitting at any time an examination of the preparation by ordinary transmitted light, for it is merely necessary to tip the mirror of the microscope and thus send rays M through the object in the usual manner.

Absolutely clean glass surfaces free from scratches and inclusions are essential. For cover glasses the use of thin freshly-prepared cleavage films of clear mica is suggested by Cotton.

The Jentzsch Ultracondenser[1] can be placed upon the stage of any compound microscope and is so constructed as to combine in itself a reflecting condenser and cell for containing liquids, vapors or gases. It consists, Fig. 33, of a metal cell M, in which are mounted the two reflecting glass bodies G, G′. These are held in place by the cement S, S. Light rays enter the apparatus through the annular opening O, strike the silvered spherical surface in G, are reflected to the curved sides of G′ and enter the central cell C. The illuminating rays, therefore, are substantially at right angles to the optic axis of the microscope, thus conforming in general to those in the slit ultramicroscope with, however, this difference, that in the slit instrument the rays enter the cell from one side only, while in the Jentzsch cell the rays enter from all sides and meet at the center. This instrument may therefore be considered as occupying an intermediate position between the slit ultramicroscope and the cardioid type of ultramicroscope.

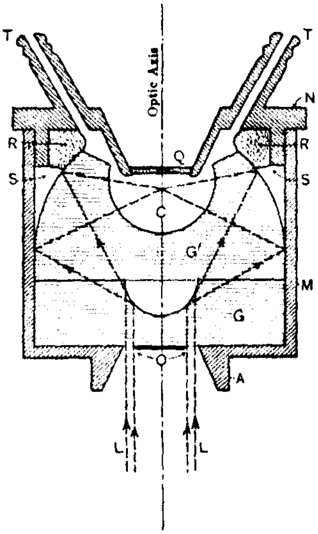

Fig. 33. The Jentzsch Ultracondenser.

A cover N fits into the mounting M and is secured in place by a bayonet catch. By turning the cover slightly it is made to press down upon the rubber gasket RR, making a very tight seal against the upper surface of G′. The tubes TT serve for the passage of gas or of liquid through the cell. The cover N is provided with a well-like depression closed at the end by the quartz plate Q. This well permits an objective of long working distance to be focused upon the particles in suspension at the focal point of the illuminating rays.

When in use the ultracondenser is laid upon the stage of the microscope with the short tube A inserted into the stage opening.

[1] Made by Ernst Leitz, Wetzlar.

The Abbe condenser is removed or swung aside. The plane mirror is then turned so as to reflect a beam of parallel rays into the device. This beam must be of such diameter as to completely fill the aperture of the condenser. A powerful source of light is essential, preferably an arc lamp or concentrated filament Mazda bulb. The mirror is tipped until the bright spot of light appears at the center of the cell. Since in this case we are examining the path of the rays as in the slit ultramicroscope and these rays enter from all sides and meet at the center, it is unnecessary to exactly center the condenser.

Special objectives of great penetrating power are necessary, corrected for the thickness of the quartz plate Q and whose mountings are of sufficiently small diameter to permit their entrance into the well in the cover to a depth such that the focal point will lie within the path of the rays. High magnifications must be obtained by employing high power eyepieces. It follows that there is always an illuminated plane lying below the focal plane of an objective and a perfectly black background is unobtainable. In order to obtain sharper contrasts, a diaphragm can be placed just above the mirror, either cutting off one side of the beam of light or having an opening slightly eccentric to that of the annular opening in the ultramicroscope.

Great care must be exercised in cleaning the cell walls and the quartz plate.

For coarse colloids and for suspended matter in vapors and water the author has found this device of great convenience and a time and labor saver; but for very fine suspensions the results are not so good.

The Immersion Ultramicroscope. — In this instrument devised by Zsigmondy[1] we have the most improved type of microscope for the study of ultramicroscopic particles yet devised; through the employment of immersion objectives of high numerical aperture for both illumination and observations, much more brilliant and sharper diffraction disks are obtainable. Thus the existence may be demonstrated of particles even smaller than those rendered visible by ultramicroscopes of the cardioid type.

[1] Zsigmondy, Physik. Zeit., **14** (1913), 975.

In this new Immersion Ultramicroscope[1] both the illuminating and observing objectives are beveled at the ends so as to allow their front lenses to be brought very close together with their axes at right angles; the drop of liquid to be examined is placed between the front lenses, clinging by capillarity. No cell is employed. The light rays having but a very short distance to travel, even dark colored liquids may be studied. Difficultly cleanable, expensive cells are thus wholly eliminated, the amount of material required for study reduced to a minimum, and the images obtained are exceptionally brilliant.

For the study of hydrosols, water immersion objectives must be used, but for colored glass and similar bodies homogeneous immersion objectives are required.

The construction of the instrument is shown in the diagram, Fig. 33A. Fitted to the body tube of a compound microscope is the objective carrier C into which *slides* a plate to which is screwed the image-forming objective O. To the stage of the instrument is attached the mechanism supporting the illuminating objective I. The micrometer screws S^1, S^2, S^3 provide means for the exact adjustment of the beam of light passing in the line of the axis of the objective I, so that it will fall normal to the optic axis of the microscope. S^1 gives an up and down adjustment, S^2 forward and back and S^3 from side to side. By rack and pinion S^4, the entire illuminating device can be lowered for cleaning, for the removal of the objectives, etc. When raised in position for use, the screw *s* is turned, thus locking the mechanism in place.

The trough T serves to catch any drip when the liquid is being applied between the objectives.

When in use, the instrument is placed on a bed plate with saddle stand upon an optical bench of the type shown in Figs. 24 and 30. An apparatus consisting of a condensing lens and an adjustable slit, also on saddle stands, serves to throw a beam of light from a radiant (arc or Nernst lamp) into the objective I.

In critical work the ocular of the microscope is furnished with

[1] Made by C. Winkel, Göttingen, Germany.

an adjustable slit-diaphragm, thus permitting the cutting down of the field until only a certain selected portion is visible.

The mutual arrangement of the two objectives is shown in

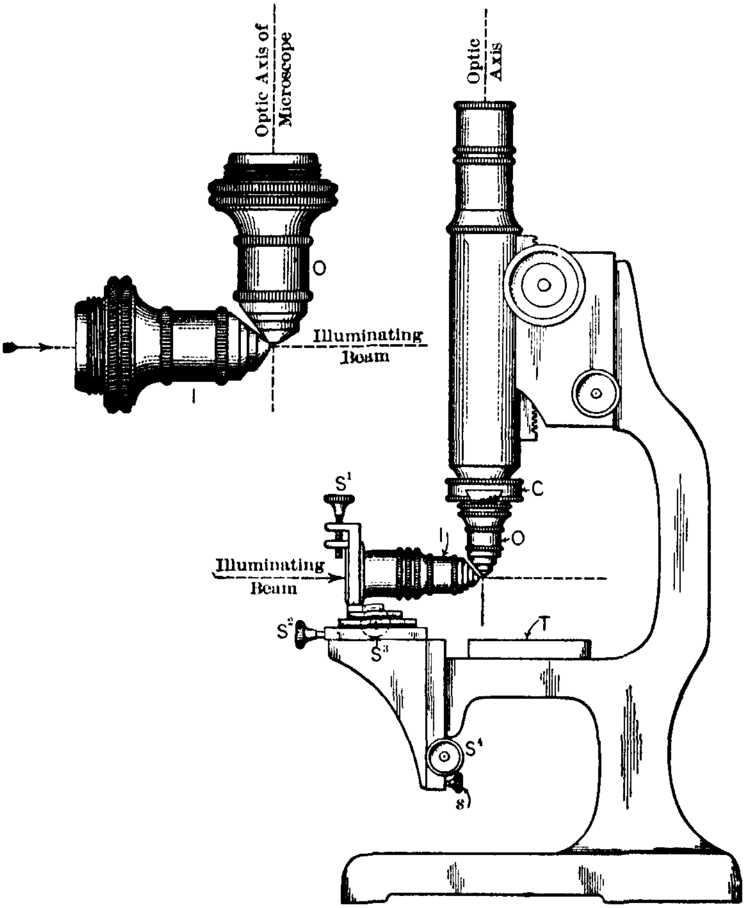

FIG. 33A. Zsigmondy Immersion Ultramicroscope.

the diagram. These objectives embody several unique ideas in mounting, construction and in the component lenses themselves; the end, or front, lenses are of quartz. An examination of the diagram will show that a drop of liquid brought into contact

with the two front lenses will cling in place. The illuminating beam will pass through this drop in the focal plane of the objective O. The image resulting upon focusing the microscope will appear to be two hazy triangles of light united at their apices by a more or less marked brighter thread or band. In this band are seen the diffraction disks due to the infinitely small particles in suspension. By means of the ocular diaphragm all of the hazy triangles are cut off and the connecting thread or band of light alone allowed to appear in the field of view.

CHAPTER V.

THE EXAMINATION OF OPAQUE OBJECTS, VERTICAL ILLUMINATORS, METALLURGICAL MICROSCOPES.

The study of opaque objects with ordinary compound microscopes requires that the illuminating rays shall fall upon the preparations from a point situated above the stage of the instrument. This may be accomplished in several ways: (1) the rays from a radiant can be projected upon the surface of the object by means of mirrors, or by means of a condensing lens; (2) a plate of glass or a right-angled prism may be placed above the objective in a tubular mounting so as to fall in the line of the optic axis, and so inclined that any light rays striking the reflecting surface will be directed down through the objective, thus brightly illuminating the object. The devices of Group 1 illuminate the preparation with *oblique* rays only; those of Group 2 reflect rays *perpendicular* to the surface of the object and are usually termed vertical illuminators. In the vast majority of cases the examination of opaque objects through illumination by rays normal to the surface of the preparation is preferable to that by means of oblique rays, since the images obtained are brighter, etched figures are more easily interpreted and the finer striations due to incomplete polishing are far less visible. Moreover, photomicrographs are usually more easily obtained.

Formerly parabolic reflectors of silvered glass or metal attached to the objective were much employed; but inasmuch as such devices can be used with only a very narrow range of objectives, and with preparations of a certain size only, their usefulness is so limited that chemists have quite generally abandoned them in favor of vertical illuminators.

Vertical Illuminators of simple construction consist of tubular adapters or cells so threaded as to permit screwing their upper end into the lower end of the body tube of the microscope, and

the insertion of an objective into their lower opening. Mounted in the axis of the adapter, or a little to one side, is a reflecting device which receives light projected upon it through an aperture in the walls of the cell and reflects the rays downward through the objective upon the preparation on the stage.

The reflecting device consists of a totally reflecting prism or a thin disk of glass or mica. These reflectors are mounted upon small metal rods passing through the adapters at right angles to the optic axis; a milled head at the end of the rod permits changing the angle of inclination of the reflecting surface.

In several types the lateral opening for the incident light is made variable in diameter either by means of an iris diaphragm or a rotating collar provided with openings of different sizes.

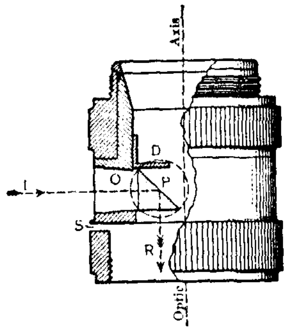

FIG. 34. Prism Vertical Illuminator.

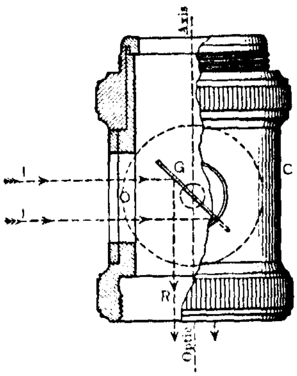

FIG. 35. Disk Vertical Illuminator.

A typical *prism illuminator* is shown diagrammatically in Fig. 34. The reflecting device consists of a totally reflecting prism P so mounted as to permit tipping slightly and thus changing the direction of the reflected ray R. Incident light I is projected upon the prism through the horizontal opening O. A diaphragm D extending not quite halfway across the aperture of the adapter serves to screen the prism and to prevent interfering reflections from blurring the image formed in the microscope.

The construction of a *disk illuminator* is shown in Fig. 35. The incident rays I, I strike a glass or mica disk G and are reflected

by it through the objective attached below. The rays I, I enter through a circular opening O. The size of this opening may be changed by turning the collar C which is provided with circular openings of three different diameters.

Adjustment of Vertical Illuminators. — When the object to be examined is small and is supported upon a glass object slide it is always advisable to place below the object slide a piece of black paper, card or other dark opaque object, so that no transmitted light can enter the objective.

The size of the spot of light concentrated upon the preparation should correspond approximately to the *area of the preparation* made visible in the microscope by the particular objective employed. It is therefore desirable that the diameter of the bundle of rays projected upon the reflecting device shall be adjustable. It is also usually best that these incident rays be nearly parallel. These two requirements are met by interposing between the radiant and the illuminator a suitable lens or series of diaphragms. In the better grades of illuminators, lenses and diaphragms are made an integral part of the apparatus.[1]

The source of incident light should be a powerful radiant, as, for example, a small arc lamp, tungsten or Nernst incandescent, or inverted Welsbach gas burner, acetylene light, or stereopticon lamp with concentration filament, or better still a nitrogen filled tungsten. In all cases the radiant should be as close to the illuminator as is possible for convenience and safety. With powerful radiants and condensing lenses, it is wise to interpose between radiant and illuminator a water cell of moderate thickness to act as a cooling device.

With very highly polished surfaces the image obtained is often of such dazzling brightness as to be almost blinding; in such cases a piece of greenish or blackish glass should always be interposed between radiant and illuminator or placed above the eyepiece.

[1] The 4 to 5 ampere arc lamps for microscopic purposes are generally fitted with a plano-convex condensing lens; in such an event no other lens between radiant and illuminator may be required. The lamp should stand 8 to 12 inches from the illuminator.

Nernst lamps with very small incandescent filaments often fail to yield a sufficiently even illumination; under such conditions a piece of ground glass interposed between lamp and illuminator will usually greatly improve the field of view, but will of course reduce the brightness of image.

To obtain satisfactory results in the study of opaque objects with vertical illuminators it is important that the objectives employed be constructed with compact mounts and that the lenses be corrected for use with *uncovered* objects. Standard microscope objectives are always corrected for some definite cover glass thickness. Moderate or high power objectives of this sort, therefore, cannot be employed for the study of uncovered preparations.

Most objective manufacturers supply special objectives for use with vertical illuminators. Such objectives have very short mounts and have the rear lens combination flush with the upper edge of the mount (see Figs. 36 and 46). This is done to prevent internal reflections and yields better fields and clearer and brighter images. It is a safe rule to follow, if the best results are wanted, to select an outfit in which the distance between the reflecting surface of the illuminator and the rear lens combination of the objective is as small as possible.

The diagrams, Figs. 36 and 39, have been drawn with a view of showing this in an exaggerated way. In Fig. 36 a short compact mount is shown, the rear lens combination is almost in contact with the reflecting prism P, while in Fig. 39 an ordinary objective is shown and the distance between reflecting disk F and the rear lens is so excessive as will doubtless lead to interfering reflections of an aggravated sort. With the construction shown in Fig. 39, an objective with compact mount would be essential.

The interior walls of vertical illuminators must never be allowed to become bright but must be kept coated at all times with a dull black finish.

Since the diameter of the rear lens combination is different in different objectives, especially when manufactured by different firms, it is evident that the best results will be obtained with illuminators of the prism type, only when the prism can be dis-

placed forward and back with reference to the optic axis of the objective in order that just the proper area of the objective may be covered by the prism.

When properly adjusted the image of the illuminated preparation should be of *uniform intensity* throughout and should not have half the field hazy and blurred with a whitish fog. Changing the distances between radiant, collective lens and illuminator and tipping the prism slightly will improve matters, but with illuminators of the type shown in Fig. 34, there sometimes remains a slight blurring of half the image. To meet this difficulty, two sliding diaphragms are provided in the Zeiss illuminator, which slip into the slot S, so constructed with two apertures and a central opaque stop as to effectually prevent reflections and passage of rays from the prism in line with the optic axis of the objective. When adjusting the illuminator, first one, then the other, of the two diaphragms should be tried to ascertain which will yield the clearest image, observations being made with each diaphragm inserted to different depths; an exceedingly slight displacement very seriously affects the clearness of the image.

Interpretation of Appearances with Vertical Illuminators. — The investigator is generally dealing with more or less highly polished surfaces and with areas, part of which are polished, part rough and often studded with minute bristling points. Less frequently, as, for example, in the study of material exhibiting fatigue failure, the preparations are polished but are crossed by exceedingly minute cracks or cleavage planes. To ascertain whether the surfaces are polished or mat, whether we have to deal with elevations or with depressions and to enable us to demonstrate slip bands in fatigue failure requires that we shall be thoroughly familiar with the optic effects resulting from different types of illumination by reflected light. These effects have already been discussed at length on pages 38 and 39, to which the student is referred.

With ordinary etched metal preparations no special difficulties arise, for with vertical illuminators the polished surfaces appear bright, the irregular or mat surfaces more or less dark. But to demonstrate fissures, cleavage planes, depressions, etc., requires

that the examination with the vertical illuminator be supplemented by very oblique illumination and that due account be taken of the *directions of shadows with respect to the radiant,* remembering of course that in the image seen in the microscope *directions are completely reversed.*

Polarized Light with Vertical Illuminators. — A further aid in differentiating between the phases present in a given specimen is afforded by employing polarized rays for illumination or analyzing the light rays reflected from the object. The light rays reflected from the polished surfaces of sections of anisotropic crystals are polarized, as has been already stated, while the rays reflected from isotropic crystal sections are not polarized. It is evident that if we pick out a given phase and employ a magnification, such that an area of this phase alone *fills* the field, we can, by studying the nature of the light reflected therefrom, often obtain information of the greatest value as to the nature of the composition of the specimen being studied. In many instances it is not even essential to confine one's attention to a selected small area but we may use low powers which will include several phases in the image.

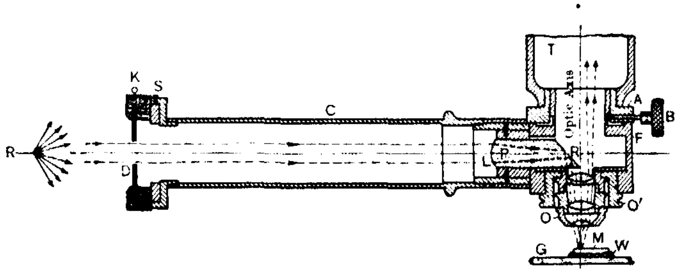

FIG. 36. Nachet Vertical Illuminator.

Nachet Vertical Illuminator.[1] — This instrument, Fig. 36, consists of a collimator tube C attached to a cell F, which in turn slips into the threaded adapter A and is held in place by the thumb-screw B. The adapter A carries at its upper end a male screw thread of standard pitch, serving to fasten the device into the end of the tube T of the microscope, while F is tapped with

[1] Manufactured by A. Nachet et Fils, Paris, France.

standard thread for the attachment of the objective OO′. Lying in the axis of the tube C is the reflecting prism P, the surface R of which is silvered, and the outer end L ground convex, thus serving the purpose of a plano-convex collecting lens. An iris diaphragm whose diameter is adjustable by the knob K is fastened eccentrically to C. The position of the center of the diaphragm with respect to the axis of C may be changed by loosening the screw S, thus making it possible to alter the position of the point of incidence upon R of the illuminating rays from the radiant, according to the power and mounting of the objective employed.

The light rays proceeding from the radiant pass through the lens L, and striking the surface R, pass through the objective which now acts as a condenser, throwing a tiny spot of intense light upon the surface of a metal preparation M. The light rays reflected from M reënter the objective to form the image seen in the microscope. A noteworthy feature of this type of vertical illuminator is the placing of the prism P in such a position as to bring its lower surface as close to the upper lens combination of the objective as it is possible to do. This greatly reduces the danger of the formation of a hazy or cloudy image by eliminating internal reflections. The position of the prism P is fixed, hence all adjustments of the light rays must be made by displacing the iris diaphragm and thus changing the position of the spot of light upon the reflecting surface R.

The Leitz Vertical Illuminator[1] is so constructed as to permit the insertion of either a disk or a right-angled reflecting prism above the objective, and is therefore applicable to all heights and powers of objectives.

The construction is shown in Fig. 37. To a cylindrical adapter K a collimator tube T is attached which carries a condensing lens L in its mounting C. C slides within T, thus permitting regulation of the diameter of the illuminating beam of light projected upon the reflecting surface. One side of K is flattened and through this surface is cut an opening into the interior of the cell. The lower part of this opening is dovetailed as shown at *d*.

[1] E. Leitz, Wetzlar, Germany.

The prism P and the disk *k* are attached respectively to the axis of the milled wheels W and W′. These in turn are mounted upon metal plates with edges obliquely cut so as to fit into the dovetail *d*. These plates when inserted and pressed in place are held by the spring *s*. They are thus secured in proper position but can be slid back and forth in the slot *d*. A mark S upon the plates and another *t* upon the adapter serve to indicate the proper position of P or *k* with respect to the optic axis of the microscope M. To remove the prism, the wheel W is pressed gently downwards and outwards, thus releasing the plate from the spring *s*; W is then carefully raised until the plate is free from the slot *d*. It can then be removed by tipping up slightly and withdrawing from the opening. To insert the disk, turn W′ until the groove *i* is horizontal, introduce *k* into the opening and push down till the lower edge fits into *d*, then press W′ forward as far as it will go. The groove S is then brought into coincidence with *t*. The reflecting disk *k* is fastened to a mounting by the spring fingers *v*. This device permits the rapid and easy removal of the disk for cleaning or for replacement when broken. The objective O is screwed into the lower opening of K; O in the illustration is an 8 millimeter apochromatic, for 200 millimeters tube length, uncorrected for cover glasses.

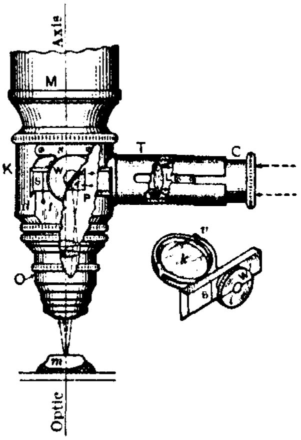

FIG. 37. Leitz Vertical Illuminator.

Just as in the simple prism or disk illuminators, the rays of light striking the reflecting surface are directed downwards through the objective upon the object *m*.

Parallel light should fall upon the lens L. This is obtained by employing a suitable lens between the illuminator and radiant. The Leitz Company supply a very conveniently mounted lens for this purpose. A metal screen A, Fig. 38, is attached to a stand B. Mounted in the screen is a lens in front of which is an

iris diaphragm D. The stand and radiant are placed at such distances from L as to project a small beam of approximately parallel light upon L. The milled head *a* serves as a fine adjustment up and down of the lens and diaphragm. When either daylight illumination, direct sunlight, or a radiant at a distance are to be used, the mirrors R_2 and R_1 are brought into service, the light from the chosen source being received upon R_2, reflected upon R_1, and thence through the lens and diaphragm opening. When a radiant close to A is used the mirror R_1 is raised until it stands in a vertical position, thus giving an unobstructed passage through the center of A.

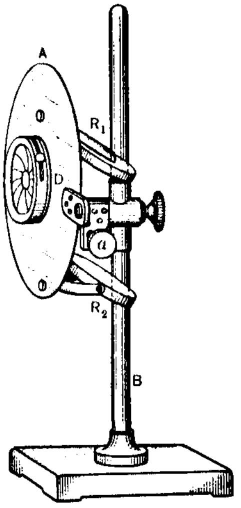

FIG. 38. Condensing Lens and Iris Diaphragm for Use with Leitz Vertical Illuminator.

Correct illumination of the surface of an object *m* is obtained as described above by trying the lens L at different distances from P and by tipping P or *k* until the most satisfactory angle of inclination is obtained. It may also be necessary to slide S slightly to the right or left of the indicator *t*. It is usually best to start with a diaphragm opening yielding a beam of light which will not more than half fill the aperture of the lens L.

Tassin Vertical Illuminator. — One of the greatest annoyances encountered in the work with ordinary vertical illuminators is the necessity of readjusting the height of the radiant whenever a change of objective is made or objects of different thicknesses are studied, since refocusing is essential and this necessarily alters the position of the disk or prism with reference to the axis of the radiant. To obviate this defect Tassin has devised an apparatus in which the radiant — either a small tungsten lamp or an acetylene burner — is attached to the illuminator mounting and hence in focusing, both radiant and illuminator are displaced simultaneously an equal amount; thus no realignment is necessary. The construction of this device will readily be understood

by referring to the diagram, Fig. 39. An ordinary disk (or prism) illuminator I is attached to the tube T of the microscope. Into the lower opening is screwed an aluminum adapter A which serves to hold in position the supporting bar B. The objective O is screwed into the lower end of A. The bar B carries a vertical sleeve J, fitted with a thumb-screw and serving to hold in place

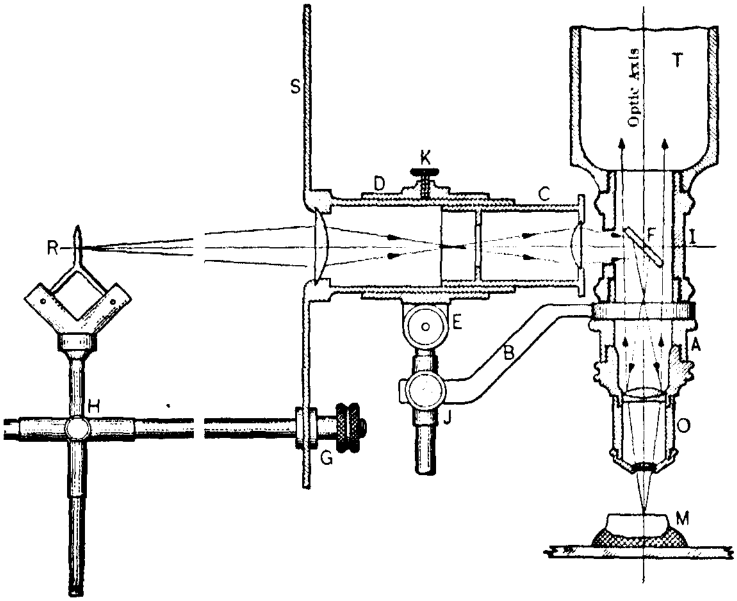

FIG. 39. Tassin Vertical Illuminator.

the remaining parts of the illuminator. The sleeve D carries a Ramsden eyepiece, securely held in position by the screw K. This eyepiece acts as a condensing lens. The correct position of the lenses to obtain a spot of bright light of the requisite diameter upon the reflecting surfaces is secured by sliding the entire ocular in the sleeve or by sliding the lens C or both. The clamping joint E permits tilting the condenser so as to obtain the correct angle of incidence upon the disk or prism. To exclude all other light from the illuminator, a screen S is attached

to the condenser system. Fastened to S is an arm G which carries the radiant R. In the diagram the radiant is an acetylene light, adjustable both up and down and forward and back in the mounting H. To make the nature of the burner clearer the flame is shown with its broad side toward the condenser. This is, however, an incorrect position for use, the proper position being *always with the edge of the flame toward the illuminator* in order that the full intensity of the radiant may be obtained. When, instead of the acetylene burner, a tiny tungsten lamp is supplied for use with this device a parabolic cover and reflector is placed back of the bulb and holds it in proper place against the screen (see Fig. 48, page 99). The light rays from the radiant pass through the condenser system, strike the reflecting device of the illuminator and are totally reflected down through the objective O upon the specimen M. The light rays reflected from M pass through the objective and strike the disk F at an angle other than that of total reflection and thus pass through to form the image in the ocular of the microscope.

Owing to the relatively great distance between the reflecting disk F and the objective it is essential that the inner surfaces of I, A and O be kept a dull black in order to prevent internal reflections.

The disadvantage of employing ordinary objectives instead of those in special short mounts will be apparent at once from the diagram, for, as just pointed out, the danger of internal reflections is very great; moreover, the length of I and A prevent low powers from being employed unless the microscope is provided with a substage upon which the specimen can be supported. With specimens placed upon the stage any attempt to focus the upper surface will entail raising the body tube of the microscope until the rack and pinion are out of mesh.

A very simple and efficient device is shown in Fig. 40, in which the radiant moves with the illuminator in focusing, thus avoiding the necessity of realignment for different sized specimens or changes of objective. It consists of a thin, bent aluminum plate S inserted between the body tube T of the microscope and the vertical illuminator I. Being provided with a hole a trifle larger

than the size of the illuminator threads it may be moved to the right or left for alignment, and clamped fast by turning the screw collar of I. L is a 6-volt 16-candle-power tungsten lamp coated with "frosting compound" in which fine graphite has been suspended. This provides an absolutely opaque covering for the lamp and prevents annoying side lights in working. A tiny clear area is made in the coating at O by means of a little alcohol

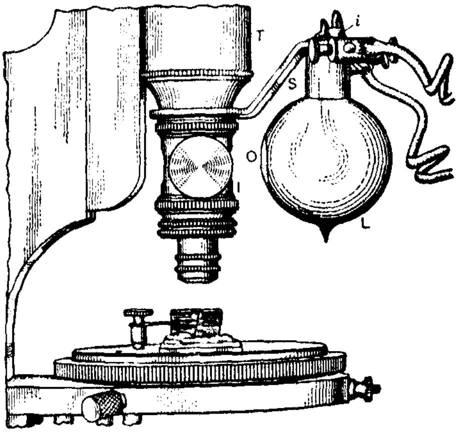

FIG. 40. Vertical Illuminator with Simple Device for a Tungsten Lamp Radiant.

on a bit of rag or cotton. The lamp L is attached to the end of S in a slot cut for the purpose and is secured in place by wires soldered to the terminals of the lamp. To obtain rigidity these wires pass downward through bits of glass tubing *i* as insulators. S is so bent as to bring the glowing lamp filament in line with the center of the illuminator diaphragms. As shown in the illustration the whole device, including the coating of the lamp, can be made in any workshop in about an hour. A better arrangement, when shop facilities permit, is to fasten an attaching socket with bayonet catch to S. The lamp is connected with the usual 110-volt lighting circuit with the interposition of a suitable rheostat or lamp bank, allowing the passage of 2 to 3 amperes (five 16-candle carbon filament lamps or two 32 and one

16). Instead of the 16-candle-power lamp one of about 20 candle-power may be substituted.

The author has found this simple and inexpensive apparatus very satisfactory. A clear, bright, uniformly illuminated field is obtained and there are no adjustments necessary.

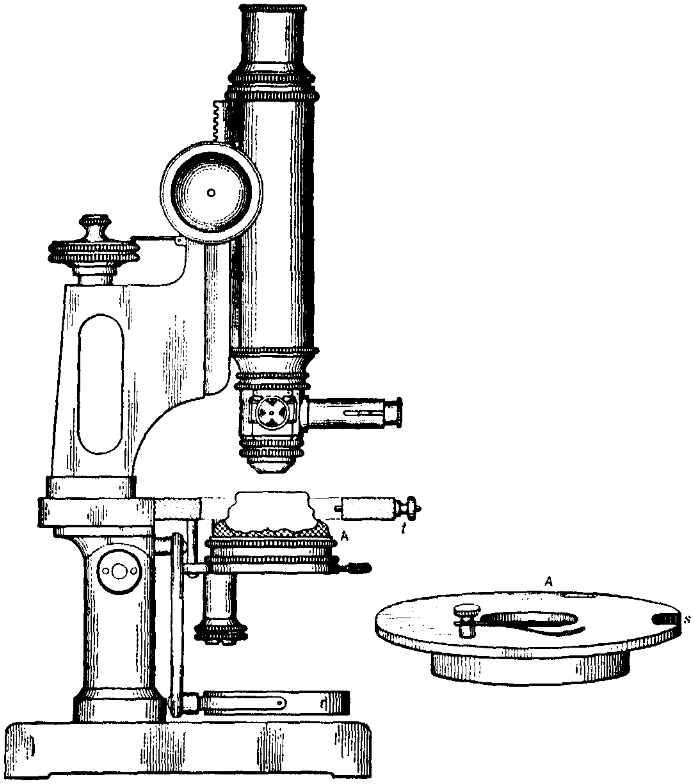

FIG. 41. Chemical Microscope with Stage removed and Auxiliary Stage inserted in the Substage Ring.

Maintaining the Alignment of Radiant and Illuminator may readily be accomplished in microscopes provided with an adjustable substage by removing the condenser or polarizer and supporting the specimen upon the substage ring. In the case of the chemical microscope, the stage is removed by loosening the

centering screws and lifting out the stage. An "auxiliary" stage is then inserted in the substage ring, the specimen placed upon it and the focusing is done by means of the substage quick-acting screw. Delicate focusing may then be made by the fine adjustment of the microscope. This method possesses the advantage of producing no disturbance of the alignment of radiant and reflector in changing objectives or in studying successively preparations of greatly varying thickness. Fig. 41 illustrates the chemical microscope with auxiliary stage applied for the examination of opaque objects. The auxiliary stage itself is shown at A.

Mounting Polished Objects. — In order to mount small preparations for examination with vertical illuminators so that when placed upon the stage of the microscope, the upper or polished surface will lie in a plane at right angles to the optic axis of the microscope, proceed as follows: place upon a 1 by 1½ inch extra thick object slide of metal or glass a small piece of soft plasticine, soft beeswax or soft paraffin; lay the object to be studied polished side up upon the imbedding material and place the preparation upon the substage ring (with auxiliary stage in place if one is at hand); place a thick glass object slide upon the stage of the microscope and then carefully raise the preparation by means of the substage screw until it is pressed firmly against the object slide, the latter being held in place with the fingers. The upper surface of the object to be studied is thus made parallel to the plane of the stage and is in proper position for examination with the vertical illuminator. Special mounting cells employing this same principle have been designed.

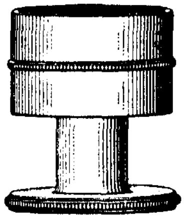

Fig. 42. Device for Mounting Pieces of Polished Metal for Study with Vertical Illuminators.

One of these cells or devices is shown in Fig. 42. It consists of a bed plate attached to a base and threaded to carry a collar screwing up and down. The upper edge of the collar is exactly parallel with the surface of the bed plate. The collar is screwed up or down to accommodate specimens of different thicknesses.

The specimen to be mounted is laid upon a piece of lens paper, polished side down upon the bed piece. The collar is then raised or lowered the proper amount and an object slip carrying a bit of plasticine is inverted over the preparation and pressed down until each end touches the circumference of the collar. The slip may now be lifted off, carrying with it the specimen imbedded in the plasticine or wax. Laid upon the stage of the microscope, the polished surface of the specimen will be in a plane normal to the optic axis of the microscope.

Metallurgical Microscopes. — The extraordinary interest in the microscopic study of metals and alloys within the last ten years and the astonishing development of theories relative to their constitution and structure, followed by the application of this information to the mechanic arts, has led to the design of special forms of microscopes to facilitate the study of the many different problems arising in the metallurgical industries. In all these special types of microscopes we have to deal with compound microscopes, having permanently attached, between ocular and objective, a vertical illuminator, usually of the prism type.

Since the etched surfaces of metals ordinarily yield images of such intricacy that notebook sketches become impracticable, recourse must be had to photography. Most metallurgical microscopes therefore include as an integral part of the instrument a photographic camera, and when thus provided they are often known as metallographic microscopes or metallographs.

In order that the structure of an alloy may be studied it is essential: (1) that a small area shall be ground to a plane surface, polished and etched; (2) that this plane surface shall lie normal to the optic axis of the microscope; (3) that the area of this plane shall be so situated with reference to surrounding parts that the objective may be brought sufficiently close to it to be focused.

Were the preparation to be laid upon the stage of an ordinary microscope it would have to be thin and to have another surface ground parallel to the etched surface. To avoid these

difficulties and further to permit the examination of fragments of moderate size, the microscope is more conveniently inverted, i.e., constructed with the objective lying below the stage. The alloy can thus be laid upon the stage, polished surface *down* over the stage opening. It will thus meet the requirement that its etched surface shall lie in a plane normal to the optic axis. Coarse adjustment focusing is accomplished by displacing the stage up or down, the tube of the microscope remaining in a fixed position, assuring no disarrangement of the proper alignment of the illuminator with reference to the radiant.

Most of the large metallographs are developments of the type first suggested by Le Chatelier. Two instruments have been selected for illustration as embodying the largest number of good features to the exclusion of those which are distinctly bad. These have been described at length in preference to other valuable instruments since the author has had the opportunity of working with them and thoroughly testing them.

The Leitz Metallurgical Microscope. — This instrument consists of the vertical illuminator shown in Fig. 37 applied to a compound microscope so arranged as to lie in a horizontal position. The general arrangement of its component parts is illustrated by Fig. 43. An optical bench B carries a series of stands with saddle bases. These stands support the different unit parts of the instrument. The first stand carries a small arc lamp R, a condenser C and a screen E; attached to E is an iris diaphragm D and a shutter (not shown in the cut) for making the photographic exposures. The next stand supports the compound microscope and its accessories; the mechanical stage *St*, the illuminator I fitted with iris diaphragm *d*, the reflecting prism V and the body tube of the microscope M with its ocular; over the ocular is fitted a removable black glass disk *b*. Coarse adjustment of the microscope is obtained by the wheel F which raises and lowers the stage *St* supported by four pillars; the object to be examined is placed polished side down over the opening of the stage; the rays of light projected by the radiant enter the illuminator I, are then reflected upward through the objective and strike the surface of the object; the rays are thence reflected

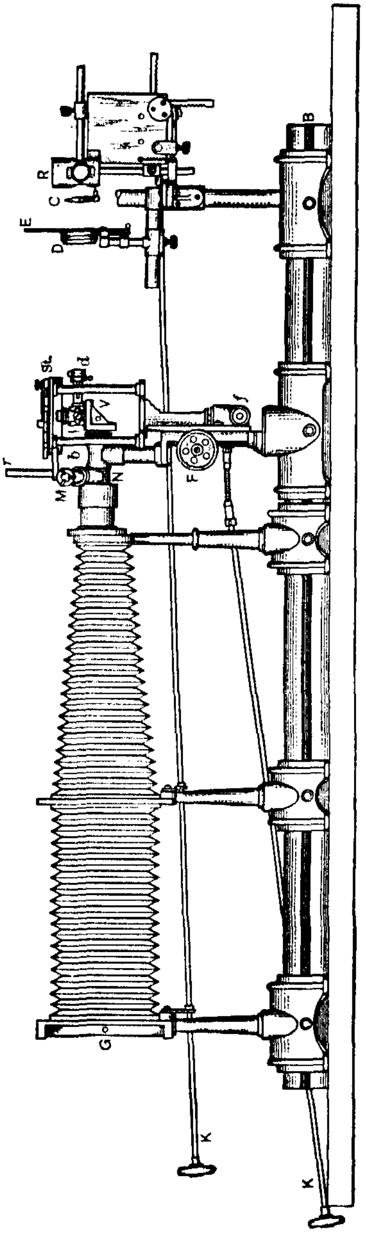

FIG. 43. Leitz Metallurgical Microscope.

downward through the objective into the prism V, the inclined surface of which reflects the rays into a second right-angled reflecting prism attached to the end of the tube M. This latter prism sends the rays to the eye through the ocular of the microscope in the upper end of M. The entire tube M slides into a

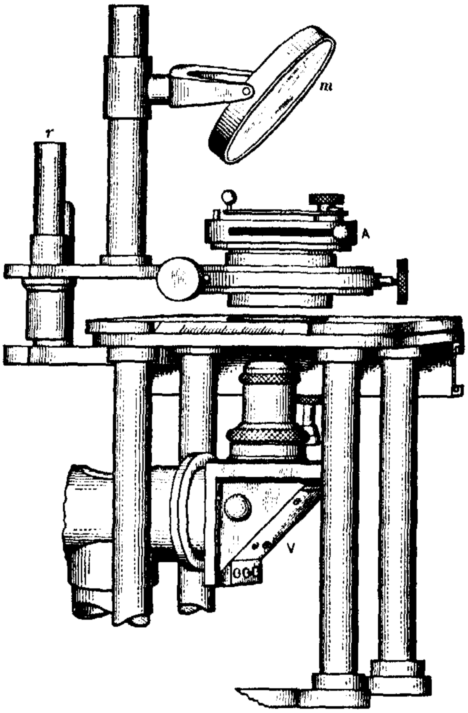

FIG. 44. Leitz Metallurgical Microscope fitted with Abbe Condenser and Mirror.

sleeve: by pulling out M, the prism attached to the lower end is withdrawn from the path of the rays which then pass horizontally through the tube N carrying at its end a projection eyepiece. The image is thus formed upon the ground glass or photographic plate of the camera. A pair of Hooke's keys K, K serve to focus the image upon the ground glass. The rod *r* rising from the stage serves to attach a mirror and an Abbe condenser. By

removing the illuminator, inserting an objective directly over the prism V, and attaching an Abbe condenser A and mirror *m* to the rod *r*, the microscope may be employed for the examination of transparent objects by transmitted light. This arrangement of the instrument is shown in Fig. 44.

The adjustment of the illumination in the Leitz metallurgical microscope is in every way similar to that followed in the Leitz vertical illuminator already described. For high powers the makers suggest employing only the disk reflector, for moderate powers the reflecting prism is used, while for very low magnifications a plate reflector is supplied so arranged as to fit between the objective and the preparation. This last device is restricted to such low magnifications, however, as to be rarely applicable to ordinary metallographic studies.

The Reichert Metallurgical Microscope. This instrument, Fig. 45, is one of the most convenient and most substantially built of its class. The microscope itself consists of a heavy base A from which rise four pillars; the largest of these, fashioned into a handle H, carries the stage S provided with rack and pinion adjustment for roughly focusing the preparation. The pillar P supports the microscope proper, consisting of a prism chamber to which the objective O, the illuminator tube V and the body tube are attached. The fine adjustment of the instrument is accomplished by the milled screw F. The prism chamber further carries a tube whose axis is at right angles to that of T, fitting into a light tight sleeve joint in C. The tube C, supported by a pillar provided with rack and pinion vertical adjustment, fits into the front of the photographic camera and serves as a carrier for a projection eyepiece. To the fourth pillar is attached the tube B, fitted with a lens for projecting parallel rays into V, a rotary disk provided with diaphragm openings of different sizes, a glass cooling cell W for water or for colored solutions to be employed as color screens and a slot for the insertion of green, yellow or black glass slips G to modify the brilliancy of the strongly illuminated surfaces. For greater convenience in making photographs a shutter *s* for exposures may conveniently be attached to the end of the tube B.

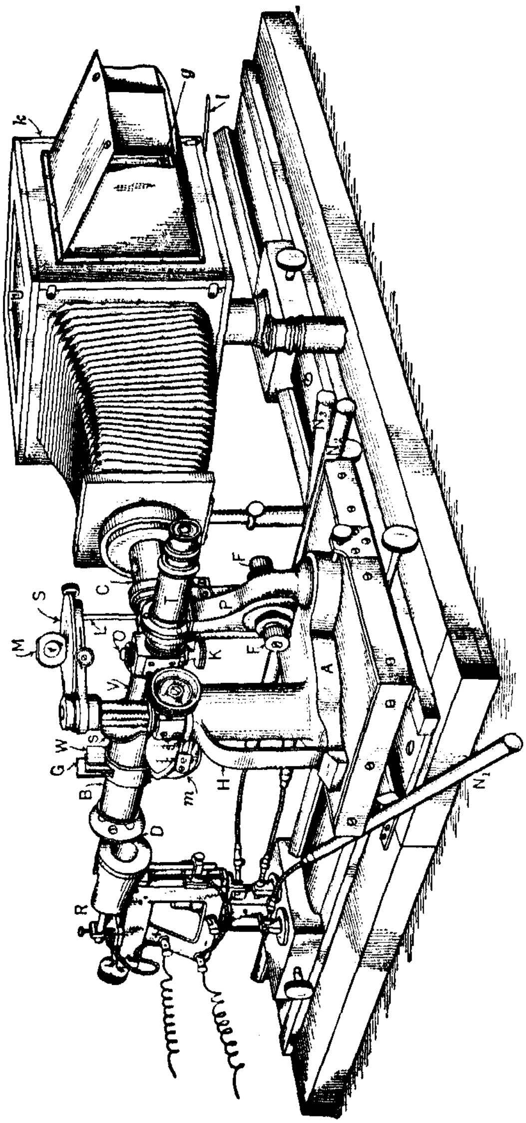

Fig. 45. Reichert Metallurgical Microscope.

In the Reichert instrument the illuminating and image-forming rays take the directions indicated in Fig. 46. The light rays from a radiant R enter the tube V, pass through a condensing lens and are twice reflected by the prism P. Passing through the objective O, a spot of bright light is formed upon the surface of the inverted preparation M lying upon the stage S. The surface of M reflects the rays downward through O to the prism P_1, thence the image-forming rays are reflected in the direction E

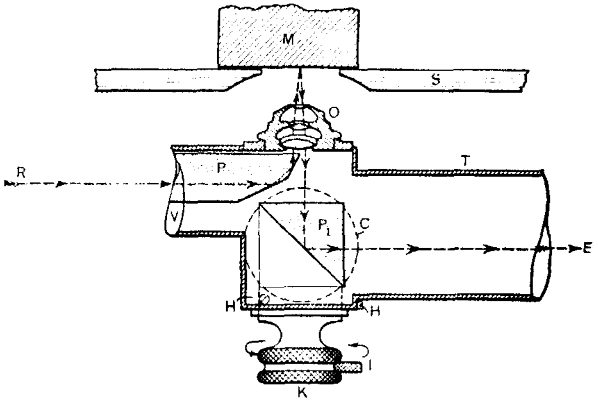

FIG. 46. Path of Light Rays in the Reichert Metallurgical Microscope.

through the body tube T of the microscope which carries at its outer end an eyepiece of the usual construction. Owing to the space required for mounting P_1, the tube length of the microscope is greater than usual and objectives corrected for a tube length of not less than 200 millimeters must be employed.

The prism P_1 is so mounted that it can be rotated through an arc of 90 degrees by means of the milled head K. To K is attached an indicator I which marks the position of the reflecting surface. In the position of I shown in the diagram the image formed by the objective is sent to the observing tube of the microscope; turned through 90 degrees the rays are reflected into the tube indicated by the dotted circle C, whose axis is at right angles to that of T. The tube C is fitted with a projection ocular whose function it is to form an image upon the ground

glass or photographic plate of the camera. Set screws H H serve to adjust and to limit the amount of rotation of K so that when turned as far as it will go in either direction the images formed will be comprised in circular fields uniformly illuminated throughout their entire areas.

The illuminator prism P is so mounted as to permit its horizontal displacement below the objective in order to conform to the requirements of different objectives. Were P immovable, in the majority of cases half the image formed in the eyepiece would be covered with a whitish cloud or fog. The amount of horizontal displacement is also such that P can be slid entirely beyond the aperture of the objective, thus allowing an unobstructed passage of rays from the objective to P_1. Transparent objects placed upon the stage can thus be studied by transmitted axial light or by oblique light.

To prevent undue strains upon the stage when large specimens must be examined a supporting rod L rises from the pillar to which C is attached and passes through a clamp attached to the pillar support of C. Tightening a set screw in the clamp prevents any vertical movement on that side of the stage and as a further protection, a set screw is also provided for locking the coarse adjustment in position. The stage may thus be held rigidly in any plane and relatively heavy objects may safely be laid upon it.

The mirror *m* is attached to a bar of such length that it can be swung close to the objective and serves to project oblique light upon the surface of the preparation in the study of fissures, slip bands, cavities, etc.

The radiant R consists of an arc lamp, that shown in the figure being a "hand feed" type. The body of the lamp is raised upon its supporting rod until the center of the crater of the arc lies in the line of the optic axis of the lenses mounted in B and V. Hooke's keys N_1, N_2, N_3 permit adjustment of alignment and illumination while looking into the instrument, N_1 turning the lamp from side to side, N_3 up or down, and N_2 approaching or drawing apart the carbons. In this lamp both + and − carbons are of the same size, but the pitch of the screw threads

feeding and moving them are in the ratio 2:1. Hence the movement through the key N_2 compensates for the more rapid consumption of the horizontal carbon.

The projection eyepiece in C forms an image upon the ground glass or photographic plate of the camera U, the size of the photograph taken being regulated by extending or contracting the bellows of the camera. A graduated scale engraved upon the optical bench, upon which the camera slides, permits a record being kept of the position of the photographic plate at the time of the exposure. In order to obviate the necessity of passing to the rear of the camera to look at the ground glass and to focus, a mirror is placed within the camera box and hinged to one corner; by means of the lever *l* this mirror may be swung diagonally across the box at an angle of 45 degrees. The image of the preparation will thus be projected upon this mirror whence it is reflected upon the glass *g*. The investigator can thus examine the image and focus the same without leaving his seat before the body tube *T*. When an exposure is to be made, the lever *l* is pushed back until the mirror lies flat against the side of the camera. There is thus an unobstructed passage through *C* and the camera to the photographic plate.

Although the Reichert metallurgical microscope is one of the best and most convenient of its kind, it has at least one very serious defect. It is supplied with specially constructed objectives whose mounts are of small diameter so made as to drop into a sleeve or adapter instead of screwing in as is the case with ordinary objectives. The purchaser of the instrument must therefore obtain his entire outfit of objectives at the time the microscope is bought. If future purchases of objectives are required it is necessary to obtain them from Reichert and in order to be certain of their proper centering the microscope should be sent to factory.[1]

[1] This difficulty has been eliminated in the instrument in the author's laboratory by fitting the opening above the illuminating prism with standard or international thread ("society screw"), thus permitting the use of all standard objectives irrespective of the firm manufacturing them, and thus greatly increasing the usefulness of the microscope, particularly when the instrument is employed for the examination of transparent objects by transmitted light.

Metallurgical Microscopes for the Examination of Large Castings, etc., are now manufactured by a number of different firms. Such instruments are often designated, as "Works Microscopes," since their purpose is the study of materials of construction already in place or too large to bring into the laboratory.

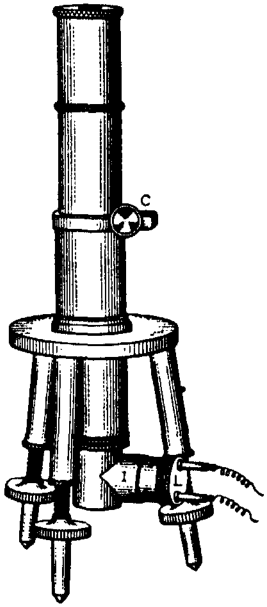

FIG. 47. Stead Works Microscope.

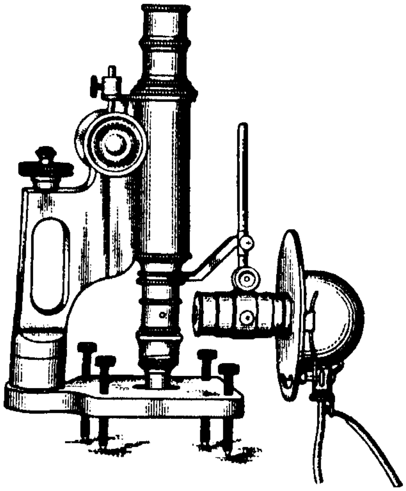

FIG. 48. Tassin Metallurgical Microscope.

As indicated by the name and purpose they are compact, substantially built and easily transportable. They consist essentially of a compound microscope, whose pillar or handle arm has been separated from the remainder of the instrument in a line in the plane of the stage, and attached to a suitable base or to three legs. In other words, these instruments are microscopes without stage or substage. When in use, the base rests upon the object to be studied and the tube carrying objective, illuminator and ocular is raked down until the surface of the object is in focus, there being an aperture in the base in line with the optic axis or the base is provided with widely divergent legs. Figs. 47, 48 and 49 illustrate typical instruments of this class.

In the Stead instrument, Fig. 47, the body tube is supported upon three adjustable legs. Focusing is done by hand by raising or lowering the tube in a sleeve. When in focus the instrument is held in place by a clamping screw *C*. A vertical illuminator of the disk type forms an integral part of the instrument.[1] The radiant in this case consists of a tiny incandescent electric lamp enclosed in a sleeve at right angles to the illuminator mounting. As the instrument is intended for low magnifications only, no fine adjustment is provided.

A somewhat similar idea in illuminator construction is found in the Tassin metallurgical microscope.[2] In this instrument, Fig. 48, we find the illuminator of the form already

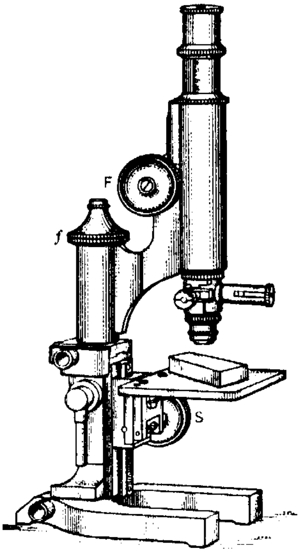

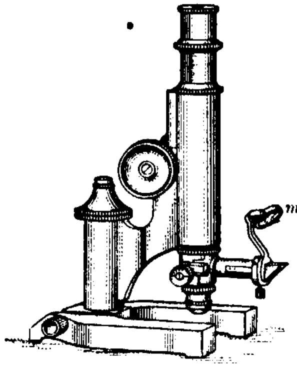

FIG. 49. Leitz Metallurgical Microscope.

described on page 84, Fig. 39, the radiant being either an electric or an acetylene lamp. The microscope itself has no substage but is mounted upon a heavy base with central opening and provided with four large leveling screws.

The third type of instrument is illustrated by the Leitz metallurgical microscope, Fig. 49. Here we have a compound micro-

[1] See Stead, Work Shop Microscopes. J. Roy. Micro. Soc. 1909, 20, 22.

[2] For its application see Tassin, The Microstructure of Steel Castings, J. Ind. Eng. Chem., **5** (1913), 713. Metallography as Applied to Inspection, J. Ind. Eng. Chem., **6** (1914), 95.

scope, consisting, as usual, of stage and substage, but with this difference, the tube and pillar are detachable from the stage, and the substage and support detachable from the base. By attaching the microscope and pillar to the base there is obtained a works microscope applicable to the study of large castings. The area of the casting to be studied is visible in the microscope in the opening between the legs of the horse shoe base. Light from a suitable radiant is deflected by the mirror *m* into a right-angled prism attached to the end of the illuminator.

For the proper illumination of the objects, the methods and precautions already described on pages 78 to 82 are obviously equally applicable.

CHAPTER VI.

USEFUL MICROSCOPE ACCESSORIES, LABORATORY EQUIPMENT, WORK TABLES, RADIANTS.

Drawing Cameras (Camera Lucidas). — It is very frequently the case that sketches, relative proportions of structural details, or actual measurements of component parts of preparations being studied must be entered into notebooks. Free-hand drawing is tedious, difficult, and if a sketch to scale is required, as is usually the case, an exceptionally good judgment of proportion is essential. To obviate these difficulties a drawing camera may be employed. Although there are many types of these devices upon the market, the chemist is usually restricted to those forms which permit employing the microscope in a vertical position.

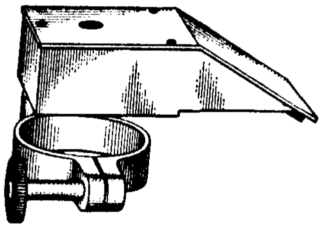

FIG. 50. Small Abbe Drawing Camera.
(Bausch & Lomb Optical Co.)

The most convenient of these drawing cameras are shown in Figs. 50 and 51.

If, after attaching one of these devices to the tube of the microscope above the ocular, the worker looks into the instrument, he is able to see simultaneously both the preparation and the page of the notebook.

In the forms shown in Figs. 50 and 51, known as Abbe prism camera lucidas, there is placed above the ocular a cube of glass which has been cut diagonally, the surface of one-half being silvered and cemented again in place, after a central oval perforation has been made through the silvered surface. This oval aperture allows the image-forming rays of the microscope to reach the eye while the silvered surface reflects from a mirror the image of the notebook page or drawing paper. Fig. 52 shows diagrammatically the path of the light rays, the dotted lines indicating

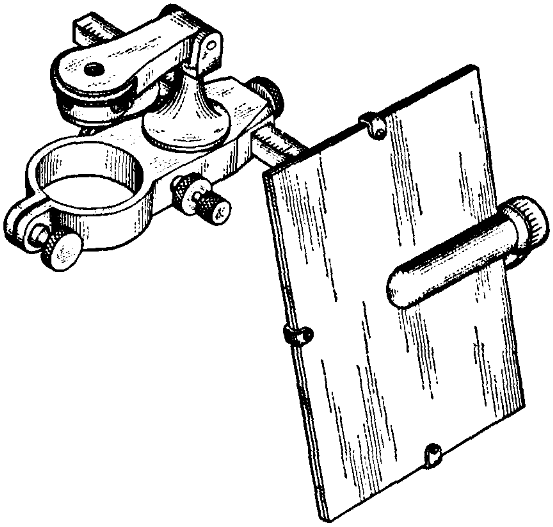

FIG. 51. Large Abbe Drawing Camera. (Spencer Lens Co.)

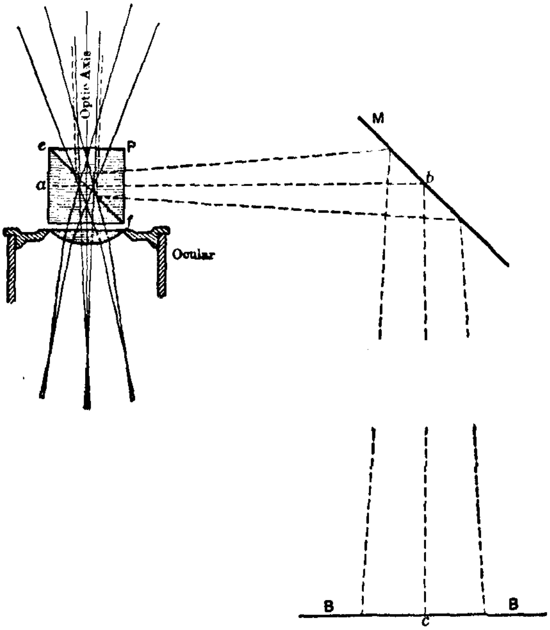

FIG. 52. Diagram of the Path of Light Rays in Abbe Drawing Cameras.

the image-forming rays from the drawing paper BB reflected by the mirror M to the reflecting surface *cf* of the Abbe prism P, and thence to the eye of the observer. The solid lines indicate the image-forming rays from the preparation upon the stage of the microscope, passing through the aperture in *cf* also reaching the eye. It is obvious that the observer is able to see both the image of the preparation and the drawing paper and can therefore trace upon the paper with a pencil the outlines and many details of structure of the preparation.

In order to avoid distortion of the drawing the mirror M must be so inclined that the light ray *bc* shall fall normal to the paper.

From an examination of the diagram it will be seen that unless the opening in *cf* is placed at the eye-point considerable light will be lost and unsatisfactory results will be obtained. Before attaching a drawing camera always first ascertain the position of the eye-point (see page 13). It not infrequently happens that in designing an ocular, the manufacturer fails to take into account the fact that the investigator may wish to use a drawing camera. The eye-point may in such cases lie so close to the eye lens or may lie so far above it as to render the employment of an Abbe prism camera impracticable. Because of this great difference in the relative position of the eye-point in different oculars it is best, in purchasing an Abbe camera, to select one of the type shown in Fig. 51, since in instruments of this sort the prism mounting is of the smallest dimensions possible and the distance between prism and clamping ring will allow exceedingly great latitude in movements up and down.

In order to equalize the light intensity reaching the eye from preparation and drawing paper, a series of dark glasses of graded degrees are mounted so as to turn and be swung in position, by a ring between prism and paper, and a ring between prism and ocular. By properly adjusting the diaphragm of the Abbe condenser and then selecting the right glasses in these rings, it is always possible to obtain a clear image of both preparation and drawing pencil.

The large cameras of the type just referred to, are provided with a graduated extension bar to which the mirror is attached

to facilitate adjustments, and the axis upon which the mirror tips is graduated into degrees. When the paper lies horizontally with respect to the optic axis of the microscope, the mirror should be set at 45 degrees, providing that the mirror bar is long enough to prevent interferences due to a reflected image of the stage; if not, then the mirror must be tipped to an angle nearer to the horizontal and the drawing paper inclined until the central rays become normal to it. The amount of inclination of the drawing surface must be twice as many degrees as the mirror is tipped below 45.

Camera lucidas serve not only for drawing but are most useful in micrometry, in reading thermometers when melting, boiling or subliming points are determined, or in reading scales of small voltmeters or ammeters when observations are being made, for upon looking into the microscope both the preparation and the scale of the instrument may be seen.

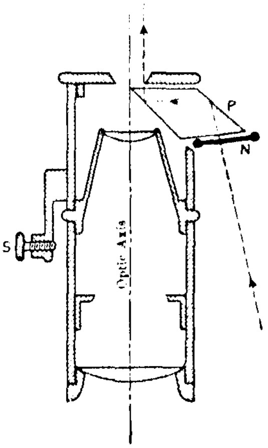

FIG. 53. Drawing Eyepiece. (E. Leitz.)

The Leitz Drawing Eyepiece, shown in section in Fig. 53, consists of a negative eyepiece whose lenses are so mounted as to permit the insertion of a reflecting prism P just above the eye lens extending to the optic axis of the ocular. Light rays (as indicated by the dotted line) from the drawing paper enter the prism, are twice totally reflected from the inclined surfaces of the prism and enter the eye together with the image-forming rays of the microscope. The eye therefore perceives the image of the object under the microscope apparently projected upon the drawing paper. Neutral tinted glasses N serve to reduce the light intensity from the drawing paper and to thus facilitate following the tracings of the pencil point. The screw S serves to clamp the device in place while in use.

Two types of these Drawing Eyepieces are manufactured,

one for use with the microscope in a vertical position, the other for a slightly inclined instrument.

Since the prism forms an integral part of the eyepiece, changes in magnification must be made wholly by changing objectives or changing the distance from drawing board to prism.

Microspectroscopes or Spectroscopic Oculars consist of direct vision spectroscopes as integral parts of microscope eyepieces. They are usually constructed after the Sorby-Browning pattern, using a compound direct vision Amici prism. These prisms consist of either three or five units, a prism of flint glass between two of crown glass, or two prisms of flint glass alternating with three of crown glass. This prism is mounted just above the eye lens of the ocular, while the slit of the spectroscope is placed in the plane of the diaphragm of the eyepiece. Usually a comparing prism is provided, which, when in position, cuts off half the width of the spectrum and permits placing in juxtaposition with the spectrum of the material being studied, the absorption spectrum of a solution of known composition. The position of bands or the amount of the spectrum cut off is determined by an arbitrary scale; or by means of an Angström scale reading in wave lengths, projected upon the spectrum, or by means of some indicating device moving the length of the spectrum, its position at any given point being indicated by a scale moved by a micrometer screw. This last type is the only one of value to the chemist.

The microspectroscope illustrated,[1] Figs. 54 and 55, is provided with a measuring device capable of yielding concordant measurements with a very fair degree of accuracy. The instrument consists of the cell or chamber K in which are housed the slit *s*, the comparing prism *p*, a movable diaphragm *d*, and in the lower opening the field lens *f* of the ocular. A small opening O in the side of K permits light, reflected by the mirror *m*, to enter the prism *p* and thus yield a spectrum in juxtaposition to that obtained from the object under the microscope. The solution or transparent solid used for comparison is held before the opening O by means of the clamps CC. The knob P serves to swing

[1] Manufactured by W. & H. Seibert, Wetzlar, Germany.

the comparing prism p beneath the slit or out to one side. T attached to a right and left threaded spindle serves to widen or narrow the slit s. Attached to the upper part of K is the remainder of the eyepiece with its eye lens e vertically movable by rack and pinion through the milled head F. Fitting above e is

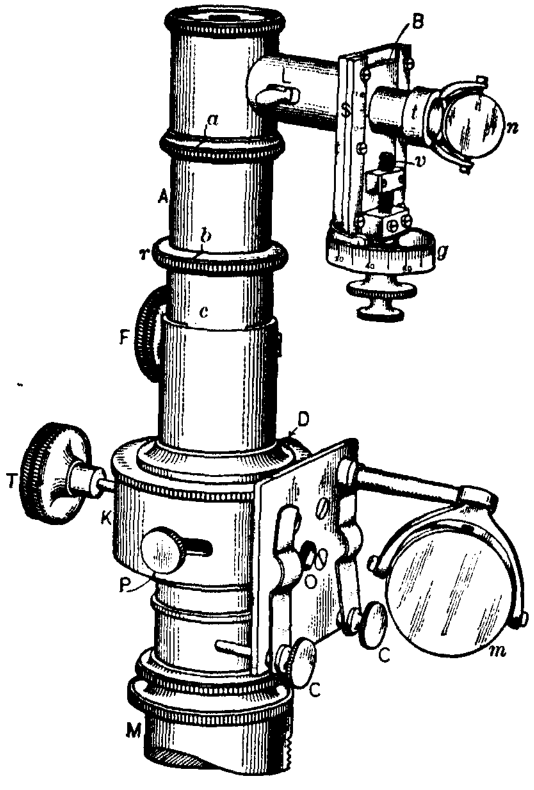

FIG. 54. Microspectroscope. (W. & H. Seibert.)

a tube A carrying an Amici prism R consisting of three prisms of crown glass (n_D = 1.534) alternating with two prisms of flint glass (n_D = 1.587).

Since the total deviation of a ray of light entering a series of prisms is equivalent to the sum of the deviations which would be imparted to it by each unit in turn, it follows from the alternate

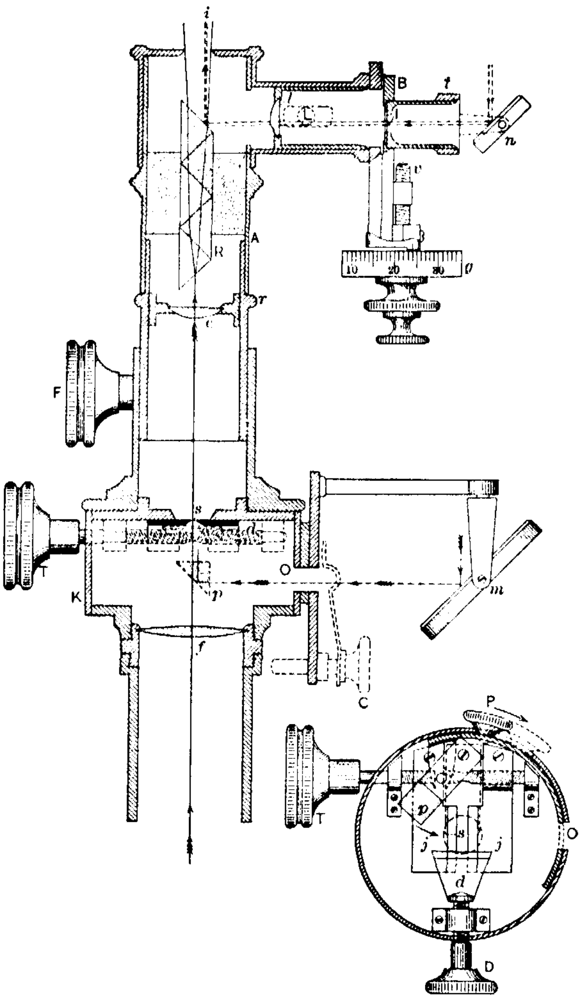

FIG. 55. Microspectroscope.

arrangement of the glass prisms, three low and two high, that the deviation of the system will be the difference between the deviations produced by the crown and flint prisms. The net result is that for rays of medium wave length (yellow-green) the path of the emerging rays lies substantially in the same line as that of the

rays entering the system, hence it is usual to term such a prism system, a *direct vision* prism. The dispersive power of such a system is equivalent to that which would be produced by the prisms of flint glass alone. In the diagram, Fig. 55, the total dispersion indicated is therefore not theoretically correct.

The measuring device of the Seibert microspectroscope fits above the tube A. It consists of a diaphragm with a very tiny triangular opening I mounted in the sliding plate B and illuminated by the mirror *n*; an image of this opening is projected by the lens *l* as a tiny bright white triangle upon the inclined surface of the prism R and is then reflected to the eye at *i*. The knob L serves to slide the lens *l* and thus focus the image of the triangular opening. The plate in which the diaphragm is mounted can be displaced vertically by means of a micrometer screw; the amount of displacement is indicated upon the scale S and by the graduations upon the drum *g*; one complete rotation of the drum (100 divisions) is equivalent to one division of the scale S.

To facilitate the illumination of the diaphragm opening I, the mirror *n* is attached to a rotating collar *t*.

The position of a line in the spectrum is ascertained by bringing the triangle image to such a position that the line bisects the vertical angle. The scale and drum divisions are then read and recorded. The equivalent of this reading in wave lengths is obtained from the calibration of the instrument by the method given below.

Should the object, whose absorption spectrum is to be studied, be so small that its image fails to completely fill the length of the slit, the slit must be shortened until the object *completely* fills it and there will be no light reaching the eye which does not first pass through the object. This is accomplished by pushing the comparing prism into place, thus cutting the spectrum in half. At the same time the mirror *m* is turned aside so that no light enters O. Should the image of the object still fail to fill the length of the slit, the sliding diaphragm *d* is moved toward the center by turning the head D, until the slit length is reduced to the proper dimensions.

In order to center the object, examine and focus it, it is neces-

sary to remove the tube A carrying the prism.[1] The slit *s* is opened to its full width and the microscope focused in the usual manner, the eyepiece having first been itself focused by means of F and set at the proper calibration reference mark *c*.

Before the instrument can yield scale readings convertible into wave lengths, it must be calibrated. This will necessitate placing upon its tubes certain reference or indicator marks. The instrument is removed from the microscope tube M, pointed toward the sky and the slit narrowed. The spectrum should appear as a long rectangular band of colored light crossed by many fine black lines at right angles (Fraunhofer's lines) to its length. Should these lines appear inclined, the tube A must be turned slightly until they are made normal to the spectrum length. Having thus carefully adjusted the prism to the proper position with reference to the slit, make the reference marks *b* upon A· and upon *r* in order to fix this position. Now carefully focus the spectrum by means of F, using the narrowest slit possible until the Fraunhofer lines appear sharpest. This should be done on a bright sunny day. Scratch the mark *c* to indicate this position. Turn *t* and tip the mirror *n* so as to reflect light into the tube and move L until a bright sharp white triangle is seen when looking into the eyepiece. Carefully turn the cap carrying the measuring device until the apex of the bright triangle takes a position just a trifle above the center of the spectrum band. This position is easily ascertained by pushing the comparing prism in place beneath the slit; half the spectrum will now disappear. The most convenient position for the bright spot of light is when the base of the triangle falls just below the dividing line. Make the marks indicated at *a* so as to fix this position. The instrument is now ready for calibration. It can be taken apart at any time and the parts replaced so as not to alter the values of the scale divisions. After calibration, if, at any future time, wave length measurements are required, the

[1] In other forms of microspectroscopes, as, for example, those manufactured by Zeiss, Leitz and others, the Amici prism is so mounted as to swing upon a hinge above the eye lens. This greatly simplifies adjustments. Unfortunately all of these instruments have measuring devices too crude to be of value to the chemist.

instrument is first set so that all the reference marks take the same positions as when the spectroscope was first adjusted.

Measurements of line or band positions are made by bringing the bright white triangle to such a position that the line or the edge of the band bisects the acute angle of the triangle. The scale S and drum *g* are then read and recorded. S reads from *o* to *10*, *g* in hundredths of *S*. For example, in the instrument illustrated: Fraunhofer $c = 0.42$, $D = 1.41$, $G = 7.11$, etc.

In calibrating by means of the Fraunhofer lines direct sunlight should be thrown into the instrument by means of the microscope mirror. For bright lines, hold the instrument clamped securely in place on a suitable clamp stand and direct it toward a Bunsen burner flame into which the metallic salts are to be introduced. The following lines will be found convenient for the calibration:

Line.	Corresponding wave length in Angström units.	Line.	Corresponding wave length in Angström units.
A	7600	F	4681
K_α	7682	Sr_β	4607
a	7201	Cs_α	4555
B	6870	Cs_β	4593
Li_α	6708	d	4383
C	6563	G	4308
Na (D)	5893	g	4226
Ba_α	5535	Rb_β	4215
Tl	5350	Rb_α	4202
E	5270	h	4103
b_1	5183	H_1	3968
b_2	5173		

When only approximate results in terms of wave lengths are needed, a very convenient device consists in plotting the curve for the spectroscope upon coördinate paper, using wave lengths as ordinates and scale divisions as abscissas. Such a calibration curve is shown in Fig. 56, the black dots indicating the measurements actually made.

For the study of the absorption bands of liquids under the microspectroscope, the most convenient cells will be found to be tubes of different size bores and lengths whose ends are ground true at right angles to their axes. A piece of compact cork provided with a central orifice is cemented to a glass object slide by

means of shellac or balsam. The short pieces of tube fit snugly into the hole in the cork and are pressed tightly against the object slide. The tubes are thus easily removable and readily cleaned.

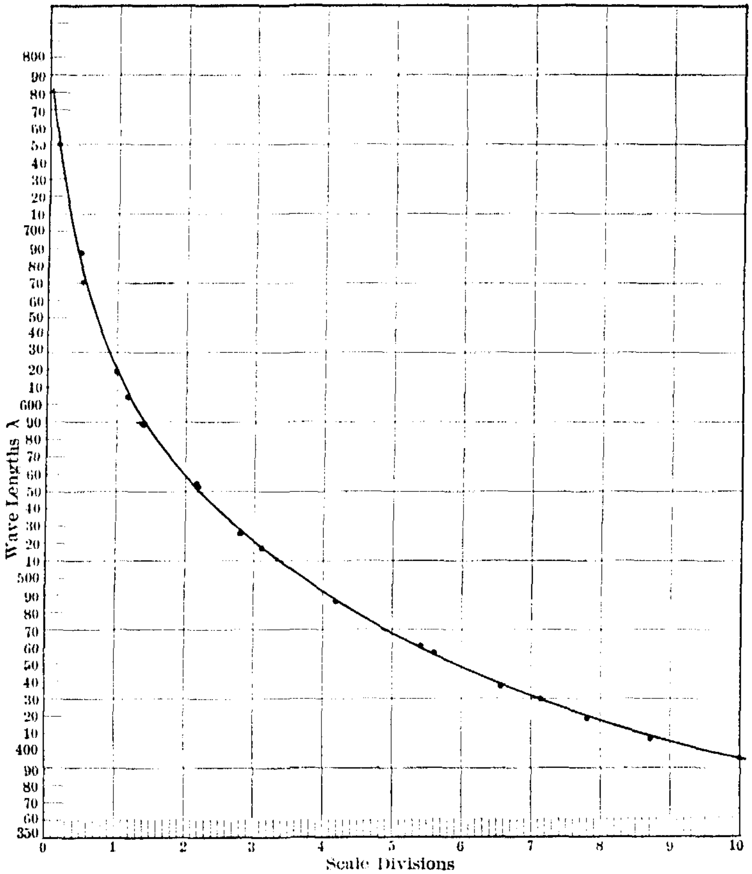

FIG. 56. Calibration Curve of a Seibert Microspectroscope.

The position of maximum intensity of an absorption band should always be determined by observing the situation of the vanishing point of the band after repeated dilutions.

It should be borne in mind that the position of a band may be changed greatly through increased or diminished dissociation, and that the absorption bands given by a crystal may be quite

different from those given by the same material in solution and furthermore that the absorption spectra are usually different in different directions through the crystal.

Mechanical Stages. — In order to facilitate moving objects and to ensure certainty in covering a given area in quantitative work some form of device permitting accurate coördinate movements in the plane of the stage becomes essential. Such devices are known as mechanical stages and are indispensable in a great variety of microscopic work. Microscopes with a fixed mechanical stage are not desirable for ordinary chemical laboratory investigations, owing to the danger of spilling corrosive liquids.

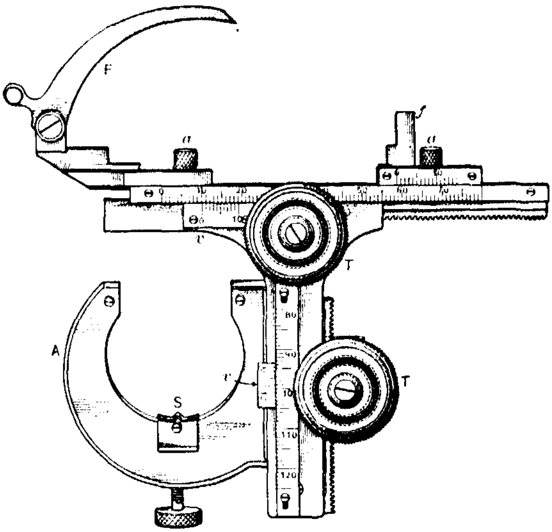

FIG. 57. Attachable Mechanical Stage.

Attachable mechanical stages are far better for our purposes. These stages are of many forms though in principle and manner of employment all are similar. A type applicable to the chemical microscope (Fig. 3) is shown in Fig. 57. The large arm A encircles the pillar of the microscope and is held firmly in place by the set screw S, seating into a shallow slot made in the base of the pillar. This ensures replacing the stage each time in exactly

the same position. Coördinate movements are obtained by the milled wheels T, T. The graduated scales in each instance are supplied with verniers *v*, *v*. The object slide is held in position by the fingers F, *f*; a spiral spring in the joint of F presses it firmly against the corner of the slide. The screws *a*, *a* permit changing the distance between F and *f*, thus providing for the use of object slides or cells of different sizes.

By means of the mechanical stage the investigator is enabled to search systematically the entire area of a preparation in such a manner as to ensure that no portion has been missed, nor has any portion been twice examined, a matter of vital importance in quantitative work, in clinical microscopy and in the examination of foods for adulteration.

Before attaching a mechanical stage of this type to the microscope, first lay a thin card or a piece of thick paper upon the stage of the microscope, then lay the mechanical stage upon the paper and securely clamp it in place about the base of the pillar of the microscope. Pull out the card or paper and the stage is ready for use. The card or paper has as its function preventing the arms from rubbing upon the stage when the arms of the mechanical stage are moved. Unless a tiny space is left between the microscope stage and the mechanical stage, a free and smooth movement of the preparation back and forth beneath the objective may be seriously hampered.

In order that full use may be made of a mechanical stage the amount of displacement must be indicated by equivalent scales on each of the two movements. It is therefore essential to find the value and the uniformity of the scale divisions and to find the diameter of the field of the microscope as indicated on the scale of the stage. This may be accomplished by laying a stage micrometer in place between the clips F*f* of the stage and measuring the displacement under a cross-haired eyepiece for different portions of each of the lateral scales of the stage. There is thus ascertained the true value of the graduations, whether both scales are equivalent and whether the scale divisions are of uniform size. To determine the amount of stage displacement necessary to just include an entirely new area, bring a line of

the stage micrometer just tangent to the circle of the field of view, read the stage and displace the micrometer until the same line is tangent to the field at the opposite end of the diameter of the field-circle and again read the stage scale. The difference in the readings will give the number of scale divisions necessary to bring an entirely new area of the preparation into the field of view with that particular optical combination which has been employed.

When the *entire* area of the preparation must be studied, the student must of course look into the instrument while the preparation is slowly displaced in one direction, as, for example, to the right or left, and then turn the stage up or down the proper number of scale divisions and again observe the slowly changing field as it is displaced in the opposite direction to the left or right.

Rotating or Orienting Devices. — It not infrequently happens that irregular fragments of material must be carefully studied, or that the exact relation of one surface to that adjacent to it must be determined, or that the behavior of light rays sent through the body in different directions be ascertained. To facilitate the changing of the position of the substance and to enable the worker to so place it that the surface being examined shall lie in a plane normal to the optic axis, various orienting devices have been suggested.

The simplest of these consist of either metal or glass hemispheres of such a size as to fit into the opening of the stage or into the opening of a plate laid upon the stage; the upper part of the hemisphere is usually a truncated cone. Having a lower hemispherical surface the apparatus may be tipped in any direction and at any angle up to approximately 45 degrees.

The Glass Hemisphere, as employed simply for the purpose of facilitating the examination of irregular objects, is shown in Fig. 58; a band around the hemisphere *gg* is rough ground so as to prevent slipping when the device is tipped. The object *o* laid upon the upper or flat surface can be so tipped as to permit the different surfaces to be studied without difficulty.

In certain classes of microscopes as, for example, Dennstedt's

"Universal" microscope[1] the stage itself consists of a huge hemisphere, thus permitting the orientation of irregular objects in all directions. This microscope was designed to meet the requirements of forensic investigations where large objects of irregular outline are the rule.

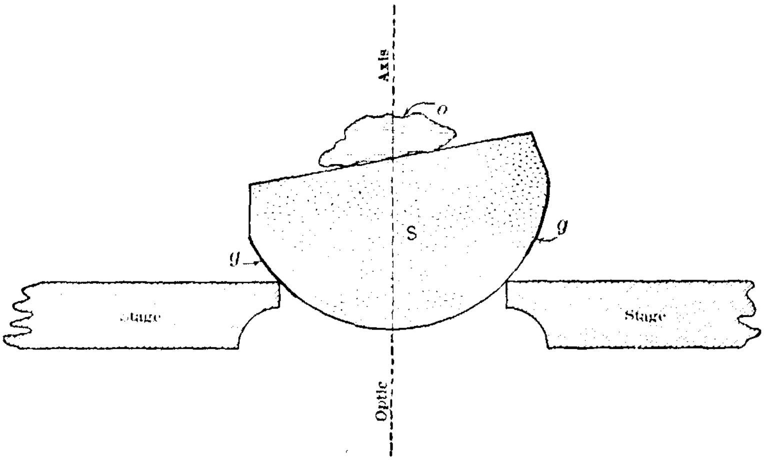

FIG. 58. Large Glass Hemisphere. An Accessory which greatly facilitates the Study of Irregular Objects.

The application of the hemisphere is also found in several microscopes intended for the study of metals. Here, however, we are dealing with opaque objects, and needing reflected light only, the orienting device can be constructed entirely of metal. A good example of this style of construction is found in Robin's metallograph.[2]

In this instrument the stage is attached, Fig. 59, to the microscope stand by a ball-and-socket joint as shown, making it possible to focus upon any given area of very irregular specimens.

To facilitate the examination of crystals with reference to their different behavior toward polarized light according to the direction through them that the light is sent, Schroeder van der Kolk suggested fastening the specimens to a small glass hemisphere.

[1] Dennstedt, Die Chemie in der Rechtspflege, p. 285, Leipzig, 1910.
[2] Robin, Traité de Métallographie, p. 50, Paris, 1912.

This idea was later elaborated by E. ten Siethoff [1] who combined the hemisphere with a system of condensing lenses, thus permitting not only the orientation of a crystal and its study under the influence of plane polarized light sent through in the directions of the different axes of vibration but also permitting observations with strongly converging polarized light in different positions. The apparatus consists of a condenser which is laid upon the stage of the microscope, the diameter of its mounting being such as to fit into the stage opening. The construction is shown in Fig. 60. The crystal fragment is laid upon the flat surface of the glass hemisphere S.

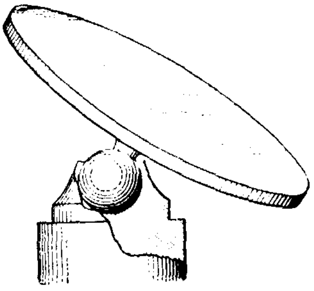

FIG. 59. Robin Ball-and-socket Stage for Metallurgical Microscopes.

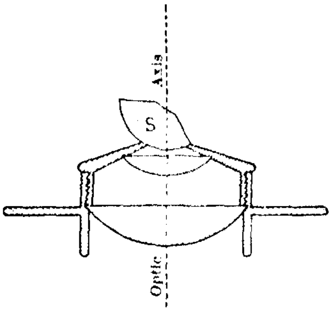

FIG. 60. ten Siethoff Glass Hemisphere.

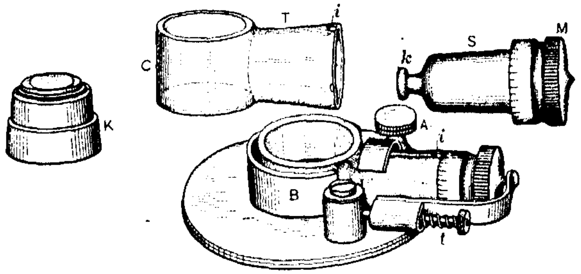

FIG. 61. Klein Orienting Apparatus.

Klein's Orienting Apparatus,[2] Fig. 61, consists of a glass cell C to which a conical tube T is attached into which is ground a plug

[1] Central. f. Min., 1903, 657.
[2] Manufactured by Voight and Hochgesang, Göttingen, Germany.

or stopper S. To the outer end of this stopper is fastened a metal head M, whose circumference is graduated, each division being equal to two degrees. These graduations are not intended for accurate measurement but merely to serve as a guide in rotating the material cemented to the knob *k* at the inner end of S. For use the cell and stopper are placed in a metal mounting B and laid upon the stage of the microscope. The cell C is filled with a liquid of such refractive index as to practically obliterate the usual heavy black contour bands. Leakage is prevented by holding the stopper tightly in place by the tension spring *t*. A curved finger, fastened by the screw A, holds the glass parts in the metal mounting and allows easy removal for cleaning. An index mark *i* upon the tube T furnishes a means of determining the amount of rotation of the object attached to *k*. The instrument is provided with two cells, one 10 millimeters deep and one 15 millimeters deep, and a special condensing lens K for observations with converging polarized light.

A Simple Device for Orientation, often perfectly satisfactory, consists in cementing the object to the point of a needle or tiny glass rod and inserting the other end of the needle or rod into a mass of plasticine. The needle or rod can be moved in any direction and secured in place by gentle pressure of the fingers upon the plasticine. Solid angles of tiny crystals may thus be computed by measuring the plane angles of the different faces in turn.[1]

Lens Holders. — Frequently low magnifications are required in preparing or separating material for microscopic study, but placing the objects upon the stage of the compound microscope is inconvenient or impossible. Recourse may then be had to magnifiers held in some sort of easily adjustable stand. The author has found a stand of the general style shown in Fig. 62[2] to be the most useful. The lens holder itself, consisting of a spring clip C, renders the stand applicable to a wide variety of uses other than merely supporting lenses. The hinged arms and thumb-screw admit of adaptation to any position and to all

[1] Kley, Rec. trav. chim. Pays-Bas., **19** (1900), 13.

[2] Made by the Bausch & Lomb Optical Co., Rochester, N. Y.

angles and elevations. The rack and pinion serves as a fine adjustment or to facilitate the examination of the surfaces of irregular objects.

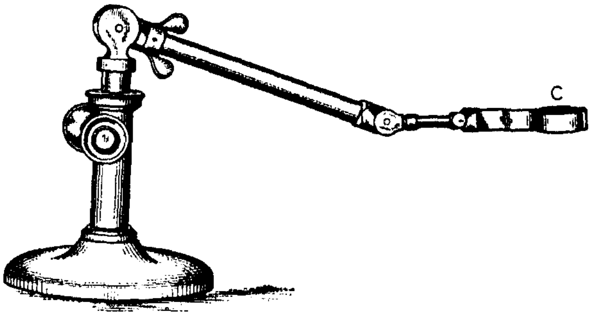

FIG. 62. Lens Holder.

Reagent Containers. — Dry reagents for microchemical analysis are conveniently kept in tiny glass stoppered vials in a block of wood (Fig. 63), the stoppers of which are numbered or lettered and the contents recorded upon a small chart which may

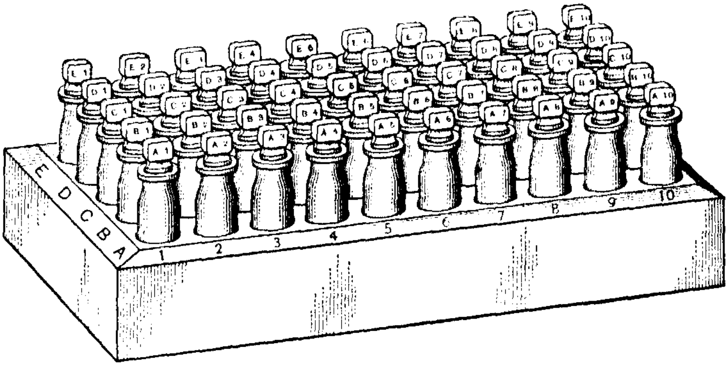

FIG. 63. Reagent Set for Microchemical Analysis.

be placed under the glass plate on the work table. A transportable set of reagents is shown in Fig. 64, modeled after the reagent box designed by Behrens,[1] differing from that of Behrens in only two particulars; in having upright stoppers in the vials instead

[1] Anleitung z. Mikrochem. Anal., Leipzig, 1899, p. 29.

of flat mushroom form, thus permitting the removal of stoppers or vials more quickly and easily, and in having all the vials glass stoppered instead of half of them with rubber stoppers.

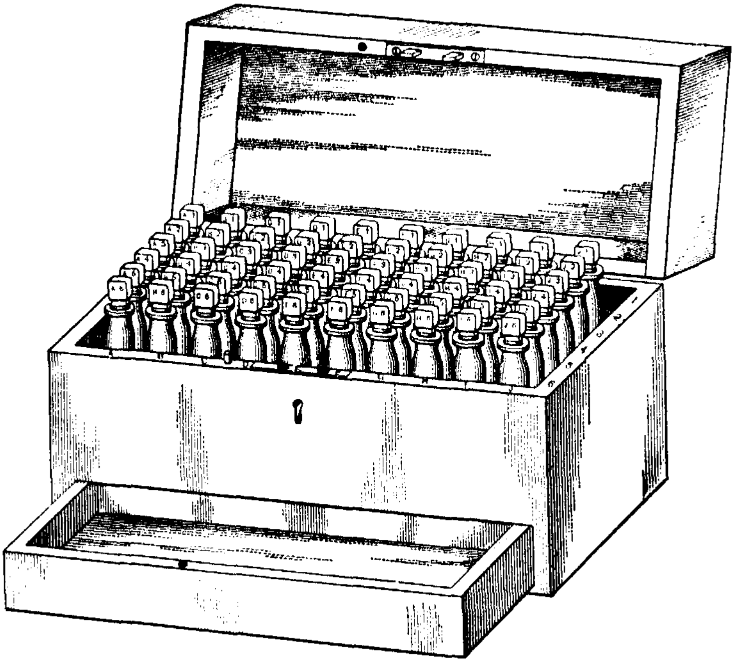

FIG. 64. Reagent Set for Microchemical Analysis. (Behrens.)

The common acids, such as hydrochloric, nitric, sulphuric and acetic, in daily use may be kept in small bottles provided with pipettes, Fig. 65. In similar bottles distilled water, dilute ammonia and dilute glycerine may be placed. A tiny shallow tray will be found convenient for holding the set of liquid reagents. Small bottles holding liquid reagents must frequently be emptied and filled with fresh material, owing to the extraction of soluble constituents from the glass walls of the containers.

Ammonium fluoride and other fluorine compounds are placed in small stoppered tubes made of hard rubber, Fig. 66, or in cerosine lined vials. In the latter case frequent renewing of the reagent is essential.

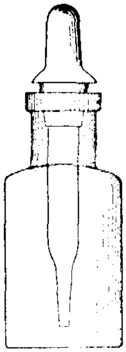

FIG. 65. Reagent Bottle with Barnes Pipette. (× $\frac{2}{3}$.)

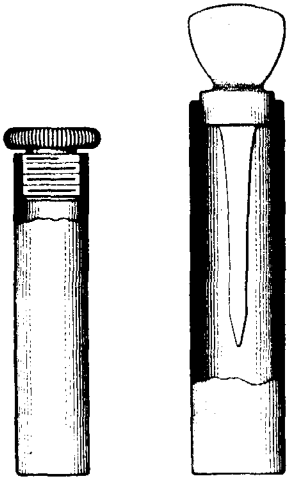

FIG. 66. Ebonite Tubes for Ammonium Fluoride.

Glass Rods and Pipettes. — The tiny amounts of reagents required for microchemical tests are most conveniently removed from bottles and vials by means of drawn-out glass rods or by platinum wires mounted in a glass handle. The type of glass rod found to be most useful is shown in Fig. 67; if one or two millimeters of the drawn-out end are slightly roughened with a piece of fine carborundum or emery cloth, or ground on a wheel,

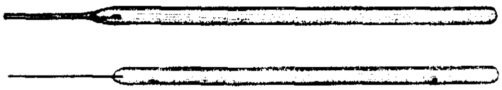

FIG. 67. Drawn-out Glass Rod and Platinum Wire for handling Reagents.

it will be found that both liquids and solids are more easily transferred and handled than if the glass be smooth. Slightly breathing on the end of the rod, or touching it to one's fingers before bringing it in contact with the reagent will cause tiny fragments of dry powders to cling to the rod long enough to permit all usual transfers. Similarly, roughening the end of the platinum wire improves its carrying power. Rods and wires roughened, necessarily require more care in cleaning after use than when polished.

Tiny pipettes may be employed for transferring solutions or liquid reagents, but are so difficult to keep thoroughly clean that it is wiser to employ short lengths of tubing of capillary bore made by drawing out odds and ends of glass tubing. Such substitutes for pipettes draw up the solutions to which they are touched by capillarity — the liquid can easily be expelled by gently blowing into one end of the tube, the other end being held against an object slide. After transferring the liquid, the capillary tube is thrown away.

Spatulas. — Larger amounts of dry reagents than can conveniently be handled by the glass rods or platinum wires may be transferred by means of small platinum spatulas, Fig. 68, made

FIG. 68. Platinum Spatula for Microchemical Analysis. (Full size.)

from a piece of platinum wire about one millimeter in diameter and 80 to 85 millimeters long, one end of which is hammered out flat on a polished steel surface until it becomes a little over 3 millimeters wide and the flattened surface about 10 millimeters long. The blade thus prepared is shaped and smoothed with a fine file and polished. The end of the handle is given a gentle blow or two with a hammer, filed to a double chisel edge and polished, thus giving an instrument useful in breaking up small fragments of soft salts, or in loosening reagents in the set of vials referred to above.

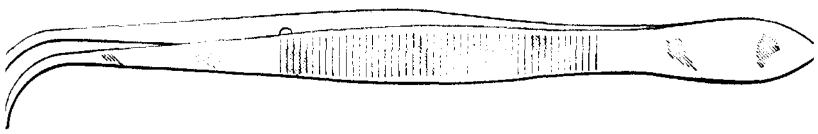

FIG. 69. Forceps for Microscopic Work. (Full size.)

Forceps. — For picking up tiny fragments of dry material, handling cover glasses, small watch glasses, etc., forceps (Fig. 69) with fine curved tips are indispensable. The corrugations usually found on the points should be carefully filed away until the tips are almost smooth.

When deliquescent or corrosive materials are to be handled the forceps should be provided with solid platinum tips, Fig. 70. No microchemical outfit can be considered as complete without platinum tipped forceps. Just as in the case above cited the roughening at the tips should be carefully removed and at least

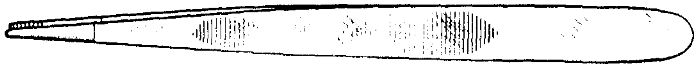

FIG. 70. Forceps with Platinum Tips. (Full size.)

one of the tips also filed flat and smooth on the outside, thus allowing the tip to be used as a tiny spatula. Tips should be sufficiently stiff and rigid to permit holding fragments firmly to obviate all danger of dropping material or bending the tips. Foil-like tips are for this reason an abomination since the slightest excess of pressure causes them to bend and loosen.

Object Slides and Other Supports. — Object slides or slips employed in microchemical analysis should be from 1 to 1.5 millimeters thick and made from glass of such composition as to be as resistant as possible to the action of solvents. The colorless glass object slides in common use in America, so excellent for ordinary microscopic work, are easily attacked by all the usual solvents and reagents employed in qualitative analysis. Great care, therefore, is necessary when very minute amounts of material are to be tested, to avoid being led into serious error arising from the extraction of constituents from the glass slides.

Object slides of greenish glass, the usual material supplied some years ago, and sometimes still found on sale, are much better, being harder and more resistant to the action of chemicals.

Standard slides, 3 inches by 1 inch, are too long and should be cut in half, or half-size slides purchased, since microchemical reactions are generally performed at the corners of the slides, seldom if ever at the center. A full-sized slide cannot be satisfactorily rotated on the stage of the polarizing microscope with the material situated at one corner, since the slide extends too far beyond the rim of the stage; nor can material be heated at the center of the slide without incurring the danger of breaking.

Object slides of ordinary non-resistant glass rapidly become

etched, corroded and scratched and should then be discarded. Before being used, new slides should be dropped in warm chromic acid cleaning mixture, washed free from all acid in hot distilled water, drained, dried, in a locality free from dust, and when dry stored in covered boxes or wide-mouthed bottles. The simplest test which can be applied to an object slide to determine its fitness for use is to place upon its surface a small drop of distilled water and slowly tip the slide; if the drop flows readily across, leaving an unbroken streak of water, the surface is clean; if, however, the drop refuses to flow or if upon flowing it immediately breaks away from the mother drop, the surface of the slide is dirty or greasy and is not fit for microchemical manipulations. Passing a greasy object slide slowly through the flame of a Bunsen burner will often render it fit for use.

All cloths used in wiping slides, etc., must be free from lint and washed absolutely free from starch, dextrine or other fillers which may have been present. The so-called "glass-toweling" of commerce, after thorough washing, will be found to be one of the best materials for use. It must be remembered, however, that after handling, any such material takes up sufficient greasy material from the hands as to render it unfit for use; for this reason it will be found convenient to have the toweling cut in short lengths and to mark one side in some manner and always apply the hands to the marked side only. Frequent laundering is essential.

The difficulty of preparing absolutely clean slides is never fully appreciated until one has tried working with dark-ground illuminators and various types of the ultramicroscope. In the more refined methods of ultramicroscopic investigations it is found that glass slides cannot be made sufficiently free from objectionable surface films for use, and recourse must be had to quartz slides or disks which, after cleaning as described above, are heated to bright redness just prior to being employed.

Quartz (fused silica) slides may now be obtained from any firm dealing in this material, sufficiently free from air bubbles, to permit using even high powers, and of such transparency as to leave little to be desired. Small slips or tiny cells of silica

will be found most useful where corrosive acid chemicals are employed or where the material must be heated to a temperature somewhat higher than the fusing point of glass. In the investigation of ultramicroscopic particles or in observations upon the action of ultraviolet light, fused silica supports and covers are essential. The price of silica object slides is still so high, however, as to be prohibitive to their employment save in investigations where glass or platinum foil cannot possibly be used.

For use with hydrofluoric acid and its salts object slides of thin celluloid will be found practicable and far more convenient than glass slides varnished or coated with Canada balsam. In the absence of good celluloid slips, glass object slides may be coated with a thin film of "Zapon" or "Bakelite" varnish.[1] Although celluloid may now be obtained sufficiently clear and colorless for all the usual microchemical methods involving tests with fluorides it possesses the drawback of great inflammability and since most of these tests require a gentle heat for their proper development, exceeding great care is necessary to avoid the complete destruction of the slide and preparation during heat treatments. Object slides made from "fireproof" photographic films of cellulose acetate are therefore better than slips of ordinary celluloid and it is to be regretted that sheets made from cellulose acetate cannot be purchased in the open market of the same thickness as those made from the nitrocellulose.

Treatment of material with alkalies or at a high heat must be confined to supporting slips made from platinum foil. In fact, a small piece of platinum foil 15 to 20 mm. long by about 7 mm. wide, sufficiently thick to remain flat when heated at a corner may be considered as a necessity. The foil must be kept flat, clean and polished. Since it is opaque, the materials must eventually be transferred to glass, quartz, or celluloid slides for examination after having been subjected to the proper reagent or heat treatment. When very low magnifications are permissible it is possible to examine the material upon the platinum foil without transferring, the illumination being either by oblique light or by some form of vertical illuminator.

[1] See also page 269.

Watch Glasses. — When volumes of liquid greater than can be handled upon object slides become necessary, small watch glasses 10 millimeters and 25 millimeters in diameter will be found convenient. Only the deep type of watch glass should be employed; for example, a 25 millimeter watch glass should be from 3 to 5 millimeters deep. Instead of 10 millimeter shallow watch glasses, object slides with a depression ground into them will be found better and more convenient.

Watch glasses are useful for covering preparations, for making tiny moist chambers, for microdesiccators, for distilling and subliming, and for evaporating solutions to small bulk.

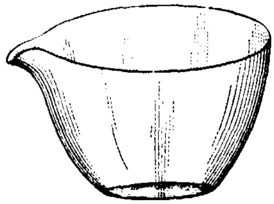

FIG. 71. Best Form of Glass or Quartz Evaporator for Microchemical Work.

Most small watch glasses are made from soft non-resistant glass, a fact which should be borne in mind when using them.

Still larger volumes of liquid than can be accommodated in small watch glasses are best concentrated in small evaporators of transparent quartz or Jena glass (Fig. 71). If those with flat bottoms are chosen they may be placed upon the stage of the microscope and any crystals, deposits, etc., examined with low powers as well as if the material were transferred to a glass object slide.

Gas Lamps for Microchemical Work. — The form of "microchemical burner" commonly referred to in the older manuals on the microscope and microscopic methods is shown in Fig. 72. This burner answers admirably for all purposes involving only moderate heating of very small amounts of material. Since, however, microchemical methods often require a preliminary handling of several grams or cubic centimeters of substance, the burner shown in Fig. 73 will be found to afford a wider range of usefulness. It also occupies less space upon the work table. It consists of an ordinary Bunsen burner provided with a side tube for a "reserve" or "pilot" flame. In the form illustrated, the tiny flame B (reserve flame) employed for microchemical work is furnished by a small brass tube inside the Bunsen tube.

This flame is always burning when the gas is turned on at the gas main; its height is regulated by the screw S so as to be from 3 to 4 millimeters high. If, as often happens, this tiny flame cannot be lowered to the proper size, remove the screw S, and drop into the hole a small fragment of very soft annealed copper

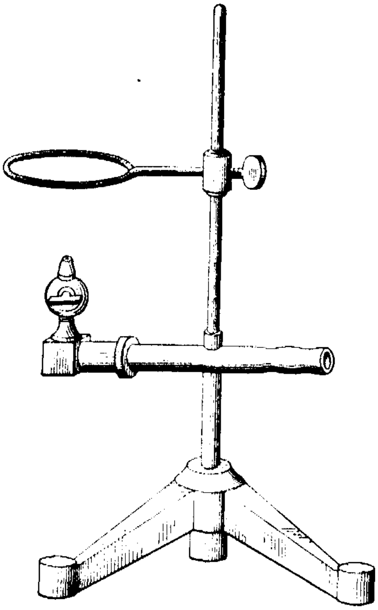

FIG. 72. Burner for Microchemical Analysis.

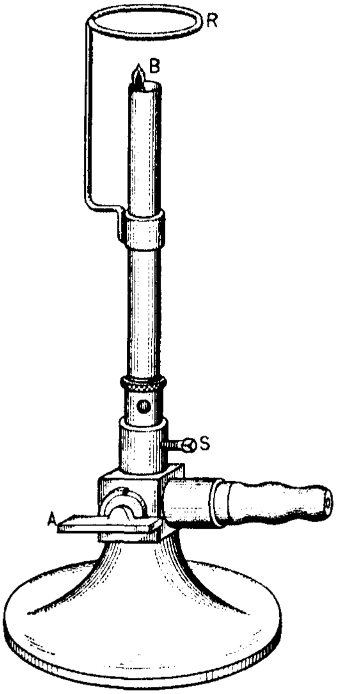

FIG. 73. Burner for Microchemical Analysis. (× ½.)

wire, replace the screw and turn until the copper fragment has been crushed sufficiently to partially obstruct the flow of gas. Turning the stopcock A lights the large burner and serves to regulate the size of the Bunsen flame. The burner is not sold with the ring R, as shown in the figure, but this attachment can be made in a few minutes by fastening a bent copper or brass wire to a split brass ring which may be raised or lowered and maintains its position through friction, or, if possible, a heavier

ring with thumb-screw is substituted for the simple ring. This wire ring is useful as a support when moderately long heating must be practiced or when evaporations over a tiny flame at moderate temperatures are required.

For the production of higher temperatures than are possible with the flame of the Bunsen burner, a blowpipe will be found convenient. The usual form employed in the blowpipe analysis provided with a platinum tip should be chosen and if in addition it can be fitted with a hot blast attachment its usefulness will thereby be greatly increased.

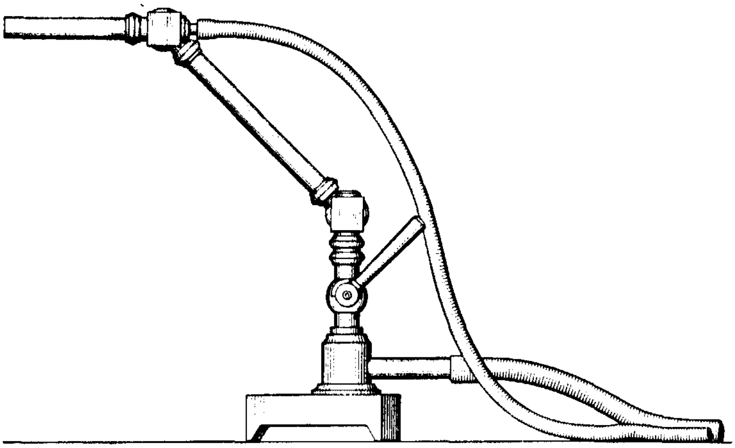

FIG. 74. Type of Small Blast Lamp for Microchemical Analysis. (× ½.)

Where the work table is supplied with compressed air a miniature blast lamp of the type shown in Fig. 74 is an invaluable aid in fusions, production of high temperatures, preparation of tiny blown glass apparatus, etc.; having two joints it can be quickly adjusted to almost any position and can even be employed to heat material directly under the microscope, although such operations are best performed by means of an electric current since the heat may thus be far better localized.

Heating preparations while subjecting them to observation through the microscope may be accomplished by means of the electrically heated hot stage (see page 224) or by a tiny flame

obtained from a glass or quartz tube drawn out and bent up and supported by the substage ring of the instrument, the rotating stage having been removed to avoid injury and the preparation supported on an asbestos plate provided with a small central orifice for the passage of light. It is obvious that when moderately high powers and temperatures are to be employed, the objectives must be kept cool either by means of a strong blast of cold air or by water jackets. To meet these conditions specially constructed microscopes are obtainable; a typical instrument of this sort is shown in Fig 7, page 29.

Small Tongs. — As a substitute for crucible tongs for holding platinum foil, cups, etc., a pair of compression arterial forceps, Fig. 75, will be found to be a valuable addition to the equipment. Forceps of this sort hold thin material tenaciously since they lock firmly in place, and thus the fingers do not become cramped during prolonged heat treatments.

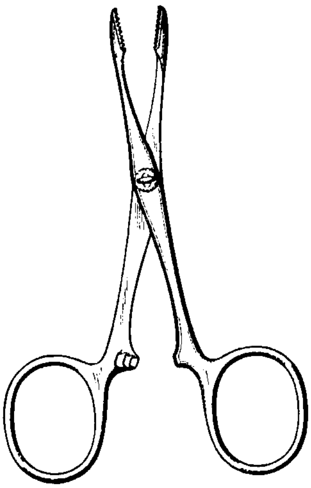

FIG. 75. Surgical Compression Forceps. Convenient for Holding Small Platinum Cups or Pieces of Foil.

Work Tables. — The type of work table chosen by the chemist upon which to place his instruments and apparatus for microchemical investigations will depend largely upon his individual preferences or upon the character of the work he is called upon to perform.

In general a table provided with an indentation or cut-out portion along one edge will be found to possess many advantages over a simple straight edged table. The worker, sitting well up into the cut-out, secures support for his arms and is enabled to sit up straighter; thus he is subject to far less fatigue during long observations and manipulations. Moreover, in the greater part of microchemical analyses or examinations more or less corrosive vapors or gases are apt to be given off which it is desirable to keep

as far away from the microscope as possible and yet the instrument must be readily and immediately accessible without material change of position. The indented table offers a ready solution of this problem for if the microscope be placed to one side of the indentation and the micro-burner and reagents on the opposite side the worker has only to swing to the left or right as the case may be to change his position from the most convenient one for manipulations to that for microscopic observation. Fig. 76 shows the construction and arrangement of a convenient work table for microchemical investigations.

When an indented table is provided with drawers as shown in the illustration, care must be taken in the construction to see that the depth of those nearest the cut-out section is not so great as to hit the knees of the worker as he swings from one side to the other.

The table top should be of close texture and finished in a dull lusterless black. A polished or shining top should be avoided, since reflections therefrom are always annoying and very tiresome to the eyes. Glass, porcelain or stone tops should therefore be finished with dull or "ground" surfaces, never polished. Coarse-grained woods should be avoided because of the difficulty of keeping them clean; for this reason the author prefers table tops of white wood or poplar, stained with aniline black, unpolished and unvarnished, and merely rubbed down smooth.

To guard against disfigurement and corrosion of the table top, manipulations are performed upon a square piece of plate glass. A convenient size will be found to be from twelve to eighteen inches square.

When possible the work table should be piped for gas and compressed air and be furnished with binding posts or switch for electric current (direct, when available). Running water is unnecessary.

The arrangement of instruments, apparatus and reagents upon the work table is shown in the cut and needs no further comment.

A stool adjustable in height and provided with a swivel seat may be said to be practically indispensable. If the stool has in

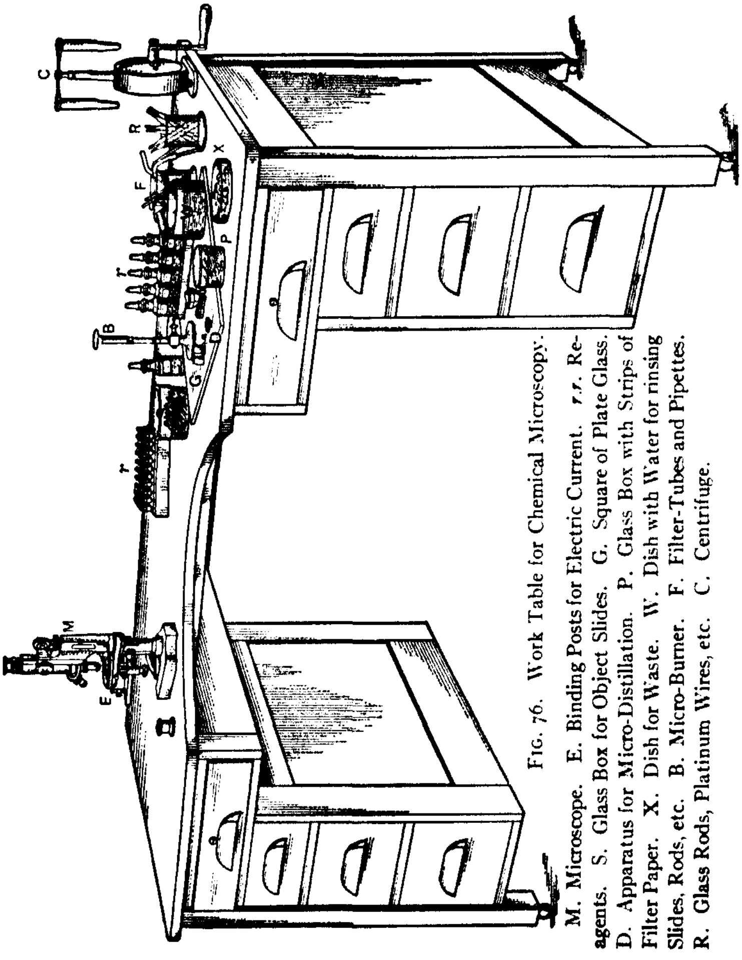

Fig. 76. Work Table for Chemical Microscopy.

M. Microscope. E. Binding Posts for Electric Current. r.r. Reagents. S. Glass Box for Object Slides. G. Square of Plate Glass. D. Apparatus for Micro-Distillation. P. Glass Box with Strips of Filter Paper. X. Dish for Waste. W. Dish with Water for rinsing Slides, Rods, etc. B. Micro-Burner. F. Filter-Tubes and Pipettes. R. Glass Rods, Platinum Wires, etc. C. Centrifuge.

addition an adjustable back the added comfort thus secured cannot be overestimated.

Radiants for Microscopic Illumination. — The modern microchemical laboratory employs as sources of artificial light for microscopic illumination the electric current or the acetylene light. Gas light illumination, using Welsbach mantles, made incandescent by coal gas, alcohol or gasoline vapors, have already become radiants of the past, and the oil lamp is now so very rarely used as to need no comment. If Welsbach lights must be employed owing to lack of electric current or calcium carbide, preference should be given to lamps of the inverted mantle type.

Cylinders containing compressed acetylene gas are now so widely distributed and the gas relatively so inexpensive (excluding the first cost of the container) that few investigators will care to be bothered with carbide gas generators. A piece of thin faintly blue glass placed between the acetylene flame and the mirror of the microscope yields light approximately equivalent to daylight, so far as color values are concerned.[1]

The development of dark-ground and of vertical illuminators and their applications has been accompanied by a corresponding improvement in electric lamps. These now fall in one of several groups: carbon arc lamps, Nernst glower lamps, tungsten filament incandescent lamps or mercury vapor lamps.

Ordinary microscopic work rarely requires an arc lamp drawing a current of more than 4 or 6 amperes, but for ultramicroscopic investigations an arc of 15 to 30 amperes is desirable and in many instances absolutely essential. Many styles of construction are found on the market. Several typical lamps are here illustrated. Fig. 77 shows the 4 ampere hand-feed arc lamp of the Bausch and Lomb Optical Company; Fig. 78 that of the Spencer Lens Company; and Fig. 79, the automatic 4 to 5 ampere lamp as manufactured by E. Leitz. In Fig. 24 an

[1] Wright, Artificial Daylight, Amer. J. Sci. (4) **27** (1909), 98. Quite recently the Corning Glass Works of Corning, N.Y., has perfected a combination of glasses such that, when employed with large tungsten lamps, true artificial daylight is obtainable as shown by spectroscopic tests.

inexpensive but very convenient type of more powerful arc lamp[1] is shown in partial section.

Arc lamps for microscopic illumination should always have

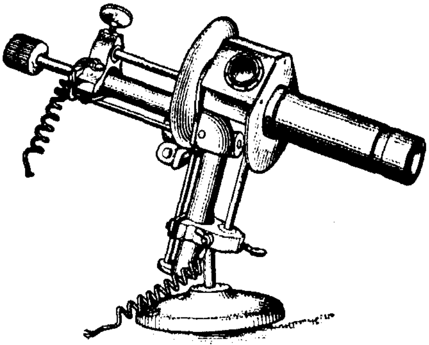

FIG. 77. Microscope Lamp; Bausch & Lomb. Arc Type.

their carbons at right angles, or approximately so. Direct current arcs are far better than alternating current. The horizontal carbon should be the positive pole and the carbons should be soft

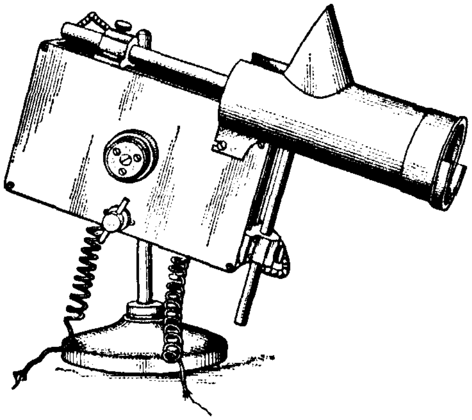

FIG. 78. Microscope Lamp; Spencer Lens Co. Arc Type.

cored. By this means the crater is maintained at a fixed point and the condensing lenses of lamps or of special stands will project an image of the crater upon the microscope mirror or

[1] Sold by Wm. Gaertner & Co., Chicago, Ill.

into the vertical illuminator without getting seriously out of alignment as long as the arc is burning. Unless a considerable sum of money is invested in a very high grade automatic lamp, it will be found better to use hand feed arcs. Cheap automatic lamps are rarely satisfactory and it is only when expensive

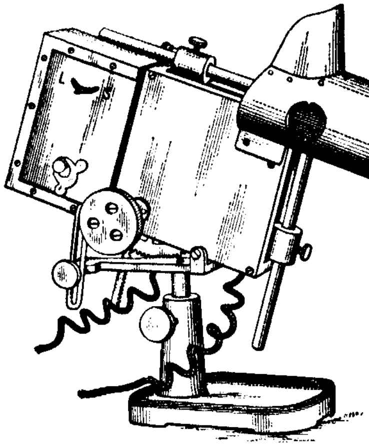

FIG. 79. Microscope Lamp; E. Leitz. Arc Type. Automatic.

outfits are purchased that steady uninterrupted feeding of the carbons takes place, yielding an arc of uniform brilliancy and non-flickering crater. Hand feed lamps are therefore to be preferred for ordinary work. Satisfactory results can only be obtained from good carbons. These should be moderately soft and of uniform composition.

In most cases the interposition of a cell filled with water between the arc lamp and preparation is essential in order to prevent damage to optical apparatus and specimens by heat. Filling the cell with a solution of alum or ferrous sulphate is no better than pure water alone.

Next to the carbon arc, the Nernst lamp is most satisfactory, so far as light intensity and convenience of mounting are concerned. Fig. 80 shows a Nernst glower galvanometer lamp[1] which serves admirably for microscopic work, especially for obtaining oblique illumination in the study of opaque objects and

[1] Made by the Cambridge Scientific Instrument Co., Cambridge, England.

as radiant for vertical illuminators. For use in this way the cross wire just outside the projection lens is removed as well as the cross wire diaphragm sliding into the tube. It sometimes happens that owing to a drop in the voltage and a high resistance of the "ballast" in the lamp, the heater will not raise the glower to the necessary temperature to permit the passage of the electric current. In such an event carefully unscrew the lamp from the tube and hold a lighted match under the glower. The glower will usually become incandescent and the lamp can be screwed back in place.

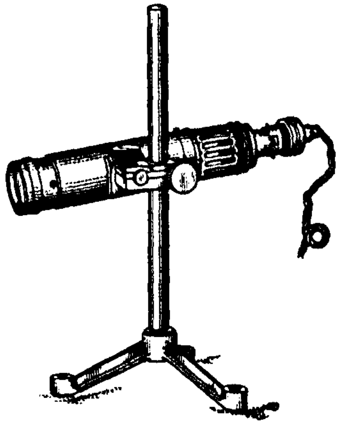

FIG. 80. Galvanometer Lamp of the Cambridge Scientific Instrument Co. Nernst Type.

A more powerful Nernst lamp is shown in Fig. 81. This lamp[1] is intended primarily for use with dark-ground illuminators. As supplied by the dealers this

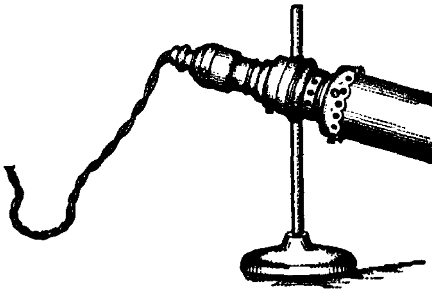

FIG. 81. Microscope Lamp. Nernst Type.

lamp has a ground-glass globe. A more convenient arrangement consists in substituting for the globe, a tin shield as illustrated.

The chief difficulty encountered with single glower Nernst lamps is the fact that the radiant is long and very narrow and its image projected into the field fails to give uniform illumination

[1] Sold by Bausch & Lomb Optical Company, Rochester, N. Y.

unless great care is taken in adjusting the distance of radiant, condensing lenses, diaphragms, etc. Multiple glower lamps are far superior in this respect. Unfortunately they are so fragile and require such care in handling as to render them expensive and therefore impracticable for the average chemical laboratory.

To obtain a uniformly illuminated field with single glower Nernst lamps recourse must be had to a screen of ground-glass. This causes a diffusion and softening of the light, but greatly reduces its intensity, the loss being from 30 to 60 per cent, according to the thickness and nature of the glass and the character of the ground surface.

The most satisfactory electric lamps for general purposes now available are Mazda projection lamps with concentrated filaments. These General Electric Company lamps have round bulbs and are made for 110 volt circuits in 100 watt and 60 watt sizes.[1] They may be obtained with plain glass bulbs or with frosted glass having a circular unfrosted window. On the Cornell University lighting circuit the 100 watt lamps have approximately 65 and the 60 watt lamps 49 candle power. Employed with screen and suitable condensing lenses these lamps leave little to be desired where a moderately powerful radiant is required. The tungsten filament will stand rougher treatment than Nernst glowers and is not subject to burning out through short circuit. They yield excellent results in illumination by transmitted light in the usual manner by means of the microscope mirror or as a source of light in dark-ground illumination or with vertical illuminators, but for oblique reflected light in the study of opaque objects, the size of the lamp bulb and the position of the tungsten filament renders the lamp and condensers somewhat clumsy and apt to be in the way. Fig. 82 shows the construction of these lamps. They are now supplied by the Bausch & Lomb Optical Company with the same style of stand as shown in Fig. 81. Because of the very little difference in the candle powers of the two lamps, it will be found that in general the 60 watt lamp is more convenient on account of its smaller

[1] Since the above was written, 200, 400 and 500 watt nitrogen filled concentrated filament tungsten lamps have been placed upon the market.

bulb diameter. To avoid eye fatigue, when using one of these powerful tungsten lamps, it should be screened or treated with frosting compound and graphite or aluminum, as suggested on page 87. Two or three dippings will be required to produce a coating absolutely opaque. A window is then made by washing off a circular area with alcohol.

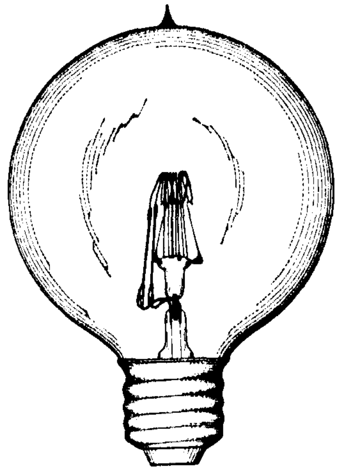

FIG. 82. Tungsten Lamp with Concentrated Filament.

Nosepieces. Objective Changers. — In ordinary microscopic investigations frequent changes from one objective to another in order to obtain increased magnification are usually necessary. To avoid the annoyance and loss of time required to unscrew one objective and reinsert another, various devices have been suggested. Those almost universally employed by biologists are known as revolving nosepieces and are shown in Figs. 83 and 84. The illustrations show their construction and operation sufficiently well to need little comment. The nosepiece is attached to the body tube of the microscope. It may accommodate

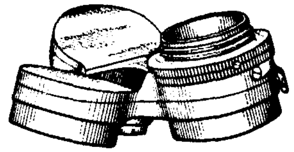

FIG. 83. Revolving Nosepiece for Three Objectives.

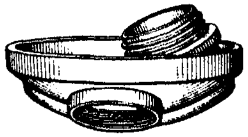

FIG. 84. Dust-proof Revolving Nosepiece.

two, three or four objectives as the case may be. The better type is shown in Fig. 84. It is circular and almost dust-proof, while in the type shown in Fig. 83, if by chance the objectives are not turned under the shields dust falls upon the back lens combinations. Owing to the almost impossibility of constructing these nosepieces so that each objective will be

properly centered when turned in place, many investigators prefer "objective holders" or "changers" instead of revolving nosepieces. Three forms of objective changers are illustrated in Figs. 85, 86 and 87. In the case of those of the form of Figs. 85

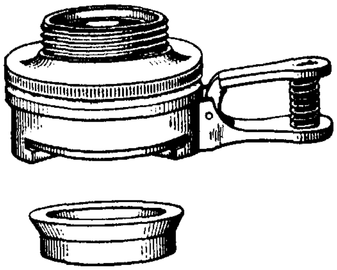

FIG. 85. Bausch & Lomb Clutch Objective Changer.

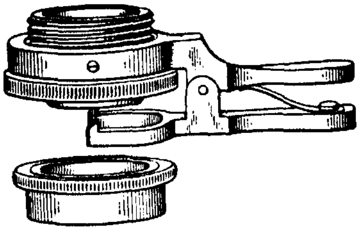

FIG. 86. Leitz Clutch Objective Changer.

and 86 a flanged collar is attached to each objective. Pressing the levers together opens the clutch, and permits the objective with collar attached to be pushed in place. Upon releasing the levers the objective is seated and securely held. In the case of the Zeiss device, Fig. 87, the objective is screwed into the sliding block *b* and is pushed into the slides in the plate *a* which is attached to the end of the body tube of the microscope. The screws S, S′, turned by a small key, permit the accurate centering of each objective. This is the best type of device when centering is essential, but requires a special box for holding the objectives to which the blocks *b* have been attached. With the clutch or clamp type (Figs. 85 and 86) the ring is of such diameter as to permit placing the objectives in their usual brass boxes.

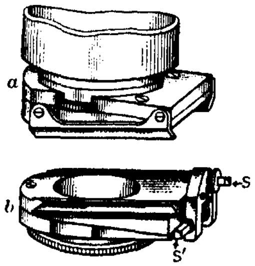

FIG. 87. Zeiss Centering Objective Changer.

Sedimentation Glasses. — The apparatus illustrated in Fig. 88, commonly known as Spaeth's sedimentation glass will be found a most useful laboratory device. The liquid containing the sediment to be examined is poured into the glass with its stopcock

up as shown. After subsidence has taken place gentle stirring will dislodge any material clinging to the sides of the vessel and this will fall to the bottom. The stopcock is now turned a quarter turn and the liquid emptied out. The stopcock can now be removed with the sediment contained in the conical depression and with but very little of the supernatant liquid. The apparatus is especially useful in cases where fractional separations through variable rates of subsidence can be practiced.

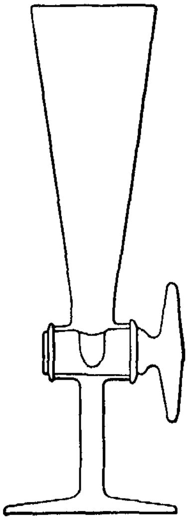

FIG. 88. Spaeth Sedimentation Glass.

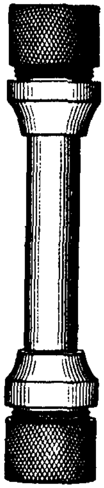

FIG. 89. Polarization Tube. Bates Type.

The Bates Polarization Tube. — It sometimes happens that an approximate determination is wanted of the specific rotatory power of a substance, but no polarimeter is at hand although a chemical microscope with polarizer and analyzer is available. By introducing a tube of a solution of the substance to be studied into the tube of the microscope, we can convert this instrument into a polarimeter. A convenient form of observation tube for this purpose is the Bates[1] polarization tube, Fig. 89. The tube is filled with a solution of the substance and placed within the

[1] Made by the Bausch & Lomb Optical Company, Rochester, N. Y.

draw-tube of the chemical microscope, thus converting the instrument into a Mitscherlich polarimeter of simplest possible construction.

The results obtained are approximate only, since the graduated circles usually attached to the analyzer (or polarizer) are of such small circumference that the readings are rarely accurate to even a degree; moreover, the end point is generally far from being sharp. It is therefore evident that the polarizing microscope with inserted tube is not to be regarded as a substitute for a polarimeter, but as a device useful in qualitative analysis, and offering a means of obtaining rough quantitative results.

To employ the microscope as a polarimeter, proceed as follows. Remove all condensing lenses from above the polarizer. Remove the objective of the microscope. Rack the body tube down as far as it will go. Insert the empty tube in the tube of the instrument; cross the nicols and note that their zero points are correctly placed. Fill the tube with the solution to be examined and illuminate with *parallel* light. Between radiant and plane mirror place a plano-convex lens to assure parallel rays. It will also generally be found essential to employ ray filters giving yellow, approximately monochromatic light.

It is even better to incline the body of the microscope until the tube is in a horizontal position, swing the mirror to one side and project the beam of parallel light upon the polarizer. A dark cloth thrown over the instrument and the head of the observer prevents light from entering between the polarizer and the tube of the microscope and any side light from entering the eye.

Upon looking into the microscope, the field will no longer be dark gray or black. Turn the analyzer until the field again acquires its maximum darkness and read the scale. The amount of displacement to the right or left, as the case may be, is the rotation of the solution. Dextrorotatory substances give a smaller angle when the nicol is turned to the right, to obtain maximum darkness, than when turned toward the left; while lævorotatory substances will give the smaller angle when the displacement from zero is to the left than when to the right. In all cases a series of angle measurements should be made and the

average taken. It is obvious that in this series, the first measurements must include rotation of the analyzer *both* to the right and to the left.

The specific rotatory power of a substance for yellow light, $(\alpha)_D$, is found from the equation $(\alpha)_D = \frac{100\,a}{lc}$, where a is the angle of rotation found, c the number of grams of substance in 100 cubic centimeters of solution and l the length of the polarization tube employed expressed in decimeters.

Since in most cases the specific rotatory power of a substance is known, we may determine the per cent of the optically active substance by dissolving a known weight of the material containing it in water, making the volume up to 100 cubic centimeters and determining the angle of rotation a in the Bates tube. This tube is 100 millimeters long. In the above equation all the members will thus be known but c, i.e., the number of grams of the active substance present in the mixture. Solving for c will give the result sought.

For further details the student is referred to the standard works on the polarimeter and saccharimeter.

CHAPTER VII.

MICROMETRY — MICROMETRIC MICROSCOPES.

The methods commonly employed for the measurement of minute objects by means of the microscope may be conveniently grouped under six different heads.

1. Comparing the object with a standard scale laid in juxtaposition on the stage of the microscope within the field of vision.

2. Measuring the object by means of a camera lucida and stage micrometer.

3. Measuring the size of the real image of the object in the microscope and dividing by the magnification of the instrument.

4. Measuring the object by means of an ocular micrometer, the value of whose scale divisions are known.

5. Measuring the object by projecting into the field, by means of a substage condenser, a scale of known value.

6. Measurements obtained by the graduated head of the fine adjustment.

At the present time substantially all measurements of microscopic objects are recorded in microns and universally designated by the Greek letter μ. A micron is one-thousandth of a millimeter. In the case of submicroscopic objects, as, for example, the exceedingly minute particles demonstrated by the ultramicroscope, a still smaller unit becomes necessary in order to avoid the use of cumbersome figures. To meet this need the term submicron or ultramicron has been proposed for a value equal to one-thousandth of a micron, the designation to be $\mu\mu$.

All micrometric measurements with the compound microscope necessarily partake of the nature of close approximations; the more skillful and experienced the investigator the more nearly will the values obtained approach the true dimensions of the object.

According to Rogers[1] it is impossible to obtain true values with certainty closer than $\pm 0.2\ \mu$, this value being, as we have already seen, the practical limit of the resolving power of the compound microscope (see page 15). But when a series of measurements are made of the same object the values obtained will usually agree among themselves by less than $0.2\ \mu$, and two different experienced microscopists may be expected to obtain values which will differ by less than this. Ewell[2] believes that microscopic measurements may be relied upon as accurate among themselves within less than $0.1\ \mu$ or even under exceptionally favorable conditions within $0.05\ \mu$.

The degree of accuracy obtained will obviously be largely dependent upon the resolving power of the objective employed.

Micrometric measurements obtained with moderate magnifications are much more accurate as a rule than those obtained with high powers.

Method 1. — *The method of direct comparison of object and scale* is generally impracticable and seldom available where ordinary microscopes are employed, since it is next to impossible to have object and scale lie in exactly the same plane under the microscope. But in "micrometer" or "traversing" microscopes the principle made use of is substantially that of a direct comparison with a micrometer scale.

Since the chemist-investigator is not infrequently called upon to make long series of microscopic measurements of objects or to measure the distance between lines in photographs of spectra, etc., types of these special micrometric microscopes are shown in Figs. 90, 91 and 92.

For the comparison of lines in small spectra, scale rulings, etc., the traversing microscope shown in Fig. 90[3] will be found accurate and convenient. This instrument consists of two microscopes A and B, mounted in fixed positions on a single

[1] Rogers, W. A., Proc. Am. Soc. Micros., 1883, 198.

[2] Ewell, J. Roy. Micr. Soc., 1910, 537. Nelson, ibid., 1910, 696.

[3] The comparator illustrated in Fig. 90 is manufactured by Carl Zeiss. For methods for determining the corrections to be applied to micrometer microscopes, consult Scientific Paper No. 215, U. S. Bureau Standards, by A. W. Gray, Micrometer Microscopes (1913).

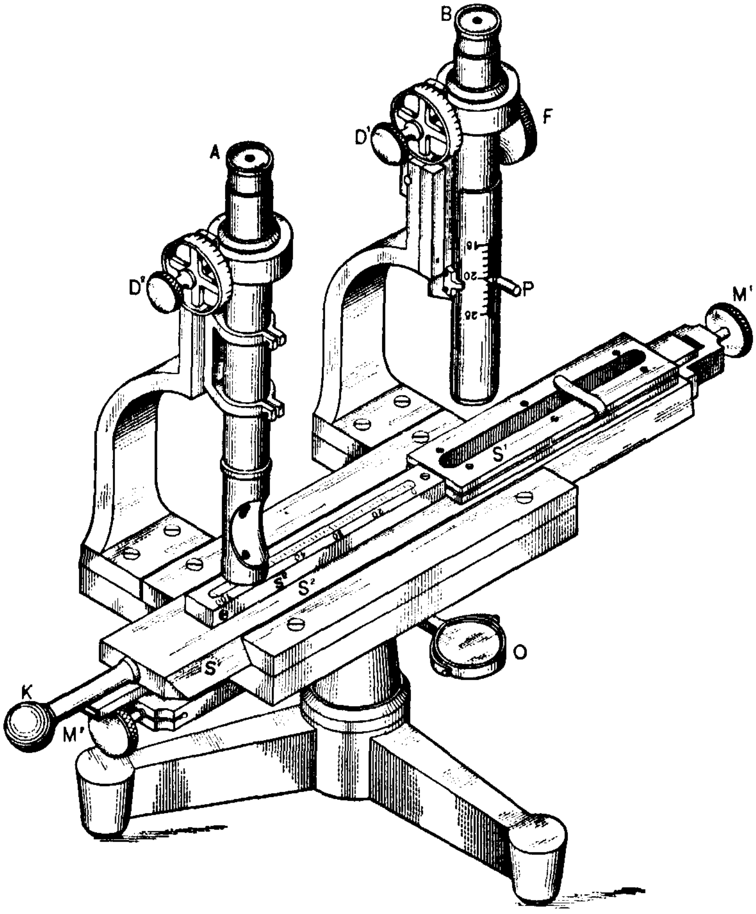

Fig. 90. Zeiss Traversing Microscope or Comparator.

heavy base. The stage S slides to the right and left in grooves; it is provided with two sections S^1, S^2, of which S^1 may be moved independently by means of the micrometer screw M^1, thus permitting a very exact adjustment of a point or line under the cross-hairs of the microscope B. At the opposite end of the stage a second micrometer screw M^2 displaces the entire stage. The section s^2 carries a finely graduated scale whose rulings are read by the reading microscope A of fixed focus. Each

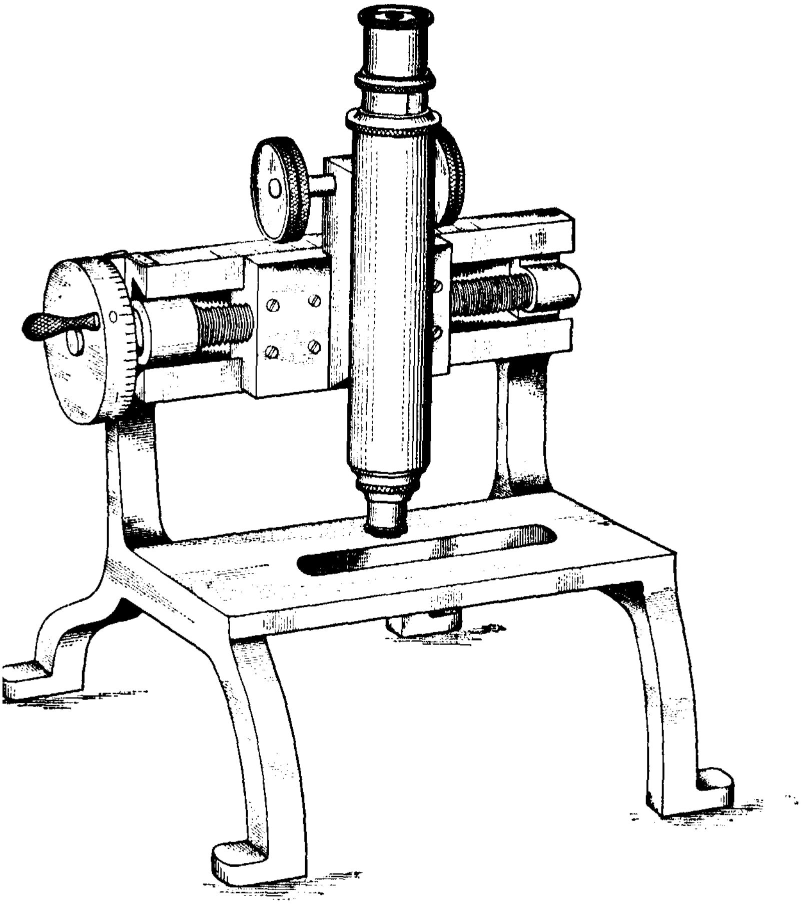

FIG. 91. Beck Micrometer Microscope.

microscope is provided with a fixed ocular with cross-hairs movable by micrometer screws attached to graduated drums D^1, D^2. The pitch of the micrometer screws is identical in each instrument. One complete revolution of a drum is an aliquot part of one division on the scale of the stage S^2. The object to be studied is placed upon section S^1 of the stage and clamped in place, the stage S having been first moved by hand by the knob K to the most convenient place for beginning the measurements.

The drums D^1, D^2, are set at zero; the point or line on the object from which measurements are to start is brought exactly under the cross-hairs of B by means of M^2; the exact position with respect to the scale is determined by the reading microscope A

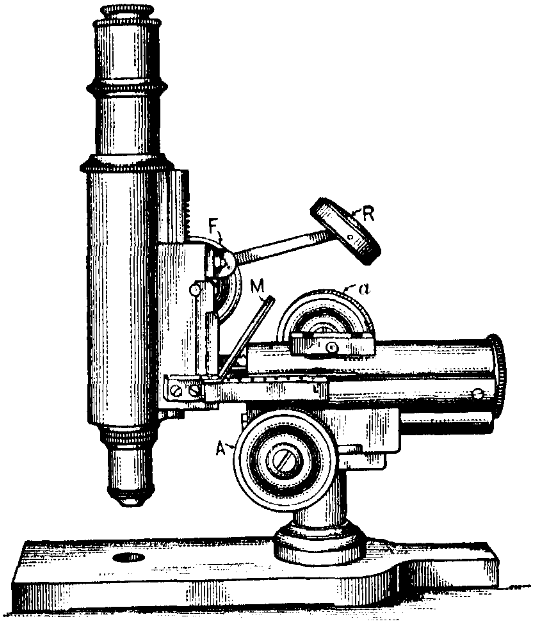

FIG. 92. Reichert Micrometer Microscope.

with great accuracy, using the ocular micrometer. The entire stage is next displaced, by hand or by the screw M^2, to the right or left, as the case may be, until the second point is reached and the scale again read.

In order to vary the magnification of the observing microscope B, the objective is mounted so as to slide up and down in the body tube. A double-ended pointer P attached to the objective mounting moves over two scales, one of which indicates the magnification, the other the ocular micrometer value of the drum D^1. Microscope B is focused by means of the pinion F, light being thrown by the mirror O through the preparation to be examined.

A simpler type of traversing micrometer microscope is shown in Fig. 91.

Micrometer microscopes of the type shown in Fig. 92 are especially adapted to the measurement of small areas (diameters of circles, etc.), as, for example, in the determination of the hardness of metals by the Brinell method of pressing a hardened steel ball, by suitable appliances, upon the object whose hardness is sought. The area or the depth of the indentation resulting, per kilogram of force applied, is used as a comparative measure of hardness.[1]

In the instrument illustrated in Fig. 92[2] the movement of the microscope is forward and back. Focusing is accomplished by the pinion F. The coarse adjustment of the cross-hairs is made by means of A and the fine adjustment upon the object by means of *a*. An inclined mirror M illuminates the micrometer scale which is read through the lens R.

Method 2. — *Measurements obtained by means of a stage micrometer and camera lucida.* Lay the object upon the stage under the microscope, over the ocular of which some form of drawing camera has been placed. Adjust the illumination even more carefully than in ordinary drawing, using axial light. Focus sharply, and carefully sketch the outline of the object upon drawing board or notebook, using a very hard and sharp-pointed pencil. The object is now removed and replaced by a stage micrometer, the instrument focused and the graduations of the scale traced upon the paper, either across the outline of the object or near by. The distance from the camera to the paper must be identical in each case. The dimensions of the object may thus be ascertained easily by comparison.

This method of indicating the size of different objects in drawings of microscopical subjects by means of tracings of a stage micrometer is always preferable to a tabulation of numerical dimensions, since the indication is a graphic one and appeals to the eye at once. Moreover, it enables another investigator to ascertain any dimensions indicated in the drawings.

[1] For a critical discussion of micrometric methods as applied to hardness determinations see Devries, Comparison of Five Methods used to Measure Hardness. U. S. Bur. Standards, Tech. Paper 11, July, 1912.

[2] Made by C. Reichert, Vienna, Austria.

Method 3. — *Measurements calculated from the magnifying power of the microscope.* This method is the least satisfactory of those discussed and is rarely employed, but needs consideration since it involves a determination of the magnifying powers of the microscope.

"The magnification of a compound microscope is the ratio between the final and virtual image and the object magnified" (Gage[1]). Magnification depends upon the power of the objective, that of the ocular and the distance between objective and ocular, and any change in any of these will alter the magnifying power of the instrument.

Magnifications are always recorded for a distance of 250 millimeters, the distance of most distinct reading vision of the normal human eye.

The magnification of a compound microscope is most easily ascertained by holding a piece of ground-glass, tracing paper or tracing cloth at a distance of 250 millimeters from the stage, excluding all side lights with a screen or dark cloth. The projected rulings of a sharply focused stage micrometer are measured with a pair of dividers or a scale. Dividing the size of this image by the actual size of rulings gives the magnification for standard distance.

Instead of employing a screen as above, we may employ a drawing camera, using as above a stage micrometer and projecting the image upon notebook or drawing board placed at the standard distance of 250 millimeters, measuring from the upper or outer face of the prism of the camera.

When an Abbe camera lucida is used with the microscope in a vertical position, in order to obtain the standard distance of magnification, one measures from the outer surface of the Abbe prism (this being the limit of the uppermost reflected ray) to the mirror and from the mirror to the drawing paper as indicated in the diagram *abc*, Fig. 52, page 103. To obtain this distance it is necessary to raise the notebook BB above the plane of the table top. With the paper in this position the magnified image of the stage micrometer rulings is sketched or the intervals taken

[1] The Microscope, 10th Ed., 1908, p. 119, Ithaca, N. Y.

with dividers; their distance apart is then determined by means of a millimeter scale and the value obtained divided by the *actual value of the stage scale* corresponding to the enlarged image. The quotient gives the magnification of the microscope.

It is evident that any note-book record of magnifying power of the various possible combinations of oculars and objectives must be accompanied by a record of the *tube-length* employed in the measurements. For this reason in determinations of magnification it is best to use the tube-length for which the objectives and oculars have been corrected.[1] It is also evident that the paper BB and the reflecting mirror M must be so placed that the axis *cb ba* is normal to BB and to the optic axis of the microscope. If for any reason the drawing paper must be inclined and is not level, in adjusting the mirror to obtain an axis normal to the paper, it should be recalled that when light is reflected, the angle between the incident and deflected ray is equal to *twice the angle* of inclination of the mirror. Hence, in order that the axial rays shall fall normal to the drawing surface, the mirror of the camera must be set at 45 degrees. But if so placed, only about one-half the field of the microscope can be sketched. In order to increase the available field, the mirror must be tipped at an angle less than 45 degrees with the horizontal. This, however, causes distortion, unless the drawing surface is inclined. The amount of inclination is in accordance with the law of reflection stated above, that is, that the drawing paper must form an angle with the horizontal twice as great as the angular amount the mirror is depressed below 45 degrees.

Having the records of the magnifying power of the various possible optical combinations, in order to obtain the dimensions of an object, it is only necessary to measure the image obtained with the camera lucida under identical conditions and divide this value by the magnification.

Method 4.—*Measurements obtained by means of micrometer oculars.* Micrometer oculars are usually of one or two types of construction: (*a*) those whose scale graduations consist of

[1] For a very comprehensive table of the tube lengths for which objectives are corrected by different manufacturers, see Gage, The Microscope, p. 18.

rulings of equidistant spaces with no provision for varying the spaces or relative position of cross lines, and (*b*) those having a scale consisting of a fixed or movable scale traversed by cross-hairs displaceable by micrometer screws attached to the graduated drums indicating the magnitude of displacement. Micrometers of the latter sort are generally known as filar micrometers and comprise the most accurate as well as most convenient microscopic measuring devices in use. Only their high cost prevents their more general employment.

Since in micrometer oculars the graduated scale is so placed as to fall in the same plane as that of the real image formed by the microscope, the number of scale graduations covered by the image gives a value for the *size of the image only* and *not* for the object. It is therefore necessary in all cases[1] to first ascertain the true value of the eyepiece scale with respect to each objective used. This is accomplished by means of a stage micrometer.

Focus the eye lens of the ocular so that the graduations of the ocular scale become clear and distinct. Lay the stage micrometer upon the stage and move it until the center of the rulings falls in the optic axis of the microscope, focus carefully and adjust the micrometers by turning ocular or stage or both until the rulings in one scale are parallel to those in the other. Move the stage micrometer until a line becomes coincident with a line of the ocular scale. Count the number of divisions of the ocular scale included between one or more divisions of the stage micrometer. Divide the value of the stage scale by the number just obtained. The quotient equals the true value of one ocular scale division. It is usually the case that conditions obtain giving an appearance shown in Fig. 93. It is obvious that in such an event it is necessary to estimate with the eye what fractional part of a division to add to the whole number of divisions of the ocular scale included in one division of the stage micrometer. Such an estimation or guess introduces a serious error into our method. Moreover, the image of an object to be

[1] An exception to this statement is to be found in ocular micrometers with scales so ruled by the manufacturer as to yield with objectives supplied for use with them a definite value.

measured rarely covers exactly a whole number of divisions of the ocular micrometer and we are obliged to make a guess as to

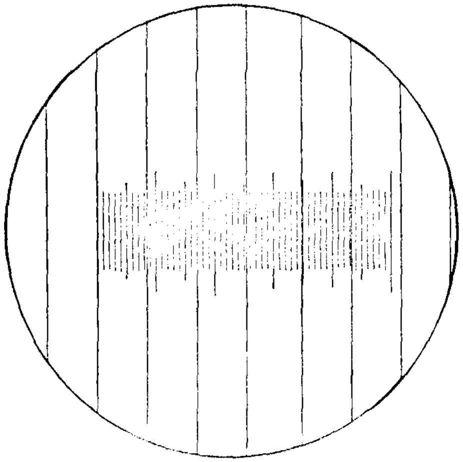

FIG. 93. Micrometer Scales Improperly Adjusted.

what fraction of a part to add. Thus there are two estimates necessary and any measurements recorded must necessarily be

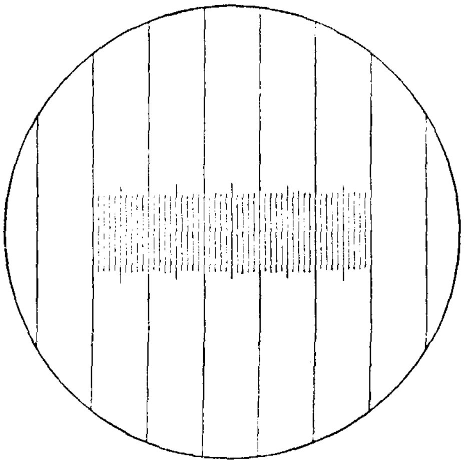

FIG. 94. Micrometer Scales Properly Adjusted.

mere approximations. The second of these errors cannot be eliminated in micrometer oculars with fixed scales having rulings

of non-variable magnitude, but the determination of the ocular micrometer value may be made more exact by eliminating fractions as shown in Fig. 94,[1] where it is evident that a whole number of ocular scale divisions are included in a whole number of divisions of the stage micrometer. This is accomplished by altering the ratio between the images of the two scales through a change in the position of the draw-tube. Start with the draw-tube pushed in as far as it will go. Pull it out one or two millimeters at a time, lining up and focusing the stage scale each time, until one or more spaces of the stage scale are covered by a whole number of divisions of the ocular scale. With the class of objectives commonly employed of comparatively low powers, the use of a tube length slightly different from that for which the lenses are designed, effects their resolving power so little as to be negligible. In order that the conditions may be duplicated under which the ocular micrometer value has been obtained, it is obvious that a record must be made of the draw-tube length employed; the notebook entry will, therefore, take some such form as this:

16 millimeter objective, draw-tube 175; 1 division ocular scale = 0.01 millimeter = 10 μ.

When high power objectives are employed the rulings of the stage micrometer will appear as very thick or coarse lines. It then becomes essential to observe special precautions in the adjusting of the ocular and stage scales, for if the adjustment shown in Fig. 95 C were to be followed, it is evident that an error will be introduced equal to at least half the thickness of the coarse stage rulings. Either the ocular micrometer scale lines must be placed at the center of the coarser stage lines, as shown in A, or the ocular lines may be placed at the right or left edges of the stage lines, but *always all of them on the same sides* as shown

[1] Figs. 93 and 94 were drawn by means of a camera lucida and therefore show exactly the conditions met with. Each division on the stage micrometer (the lines crossing the entire field) equals 0.1 mm. With a pair of dividers compare the magnitude of a space in Fig. 93 with one in Fig. 94. It will be found that lengthening the draw-tube has changed the ratio between images of stage and ocular scales.

in Fig. 95 in B. The value of the ocular micrometer scale must be determined for each objective in turn, adjusting the draw-tube in every case so as to avoid estimating fractions of a scale division and in each case the record must be kept of the tube length under which the observations were made.

FIG. 95. Determining the Ocular Micrometer Ratio: Heavy Lines = Stage Micrometer, Light Lines = Ocular Micrometer.

In the ordinary micrometer ocular it is often somewhat of an eye and mental strain to count the number of scale divisions, especially if the object is relatively large. To facilitate counting, Leitz has placed upon the market a scale, part black, part light, in which the divisions are sharply differentiated in blocks of ten, both horizontally and vertically. This type of ruling has received the name of Step Micrometer, and is far less fatiguing to employ than the older simple ruling. Fig. 96 shows part of the scale of a step micrometer. Instead of being ruled in tenths and hundredths of a millimeter as usual, such a value is used by Leitz that when Leitz objectives are employed on a Leitz microscope, it is only necessary to set the draw-tube at the point indicated for that particular objective. The ocular micrometer value is obtained from a table, supplied with the instrument. Calibration by means of a stage micrometer is therefore unnecessary.

Fig. 96. Method Employed in Ruling the Leitz Step Micrometer Ocular.

For measuring bright or self-luminous bodies, such as the incandescent filaments of lamps, etc., the Gebhardt Contrast Micrometer, Fig. 97, made by Zeiss, will be found useful. In place of line rulings, which would be practically invisible, the scale consists of a row of tiny black squares touching at their

corners. A scale of this type will stand out sharply, no matter how bright the object may be.

Filar Micrometers. — In micrometry with oculars having fixed scales there is always the probability of considerable error, as we have seen, since the magnitude of the real image as measured by the ocular scale usually requires a guess as to just how much of the scale is included. Very minute objects even with high magnification may fail to yield real images of sufficient size to even fill a single division of the ocular scale. To meet conditions such as these filar micrometers are employed. In instruments of this kind, a set of cross-hairs are made to traverse a fixed scale by means of a screw provided with micrometer thread, the amount of the movement of the cross-hairs being indicated by the revolution of a drum attached to the screw head. A typical instrument of this class of micrometer oculars

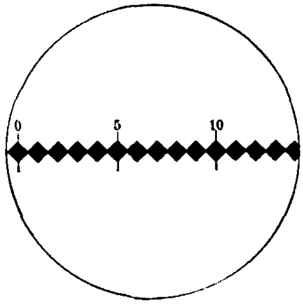

FIG. 97. Zeiss Contrast Micrometer Ocular for Measuring Bright Bodies.

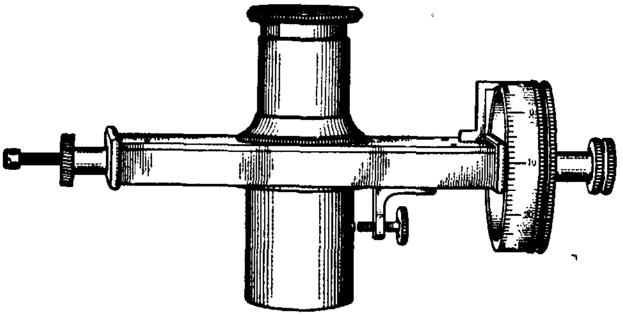

FIG. 98. Bausch & Lomb Filar Micrometer Eyepiece.

is shown in Fig. 98. The scales and measuring devices of instruments of this class differ in different instruments. Figs. 99 and 100 illustrate two of these forms. The Zeiss filar micrometer has an immovable scale with the zero at a fixed point as shown, Fig. 99; across this scale there moves simultaneously the set of cross-

hairs CC, and the parallel indicator lines **C**. One complete revolution of the drum is equivalent to one of the small divisions of the fixed scale. Fig. 100 shows a Bausch & Lomb micrometer ocular whose fixed scale consists of a black comb of equidistant teeth; the center of each tooth is marked by a sharp,

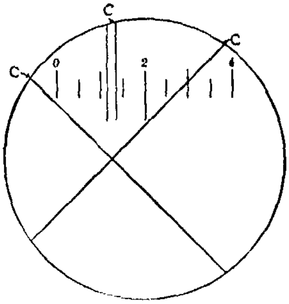

FIG. 99. Scale of the Zeiss Filar Micrometer.

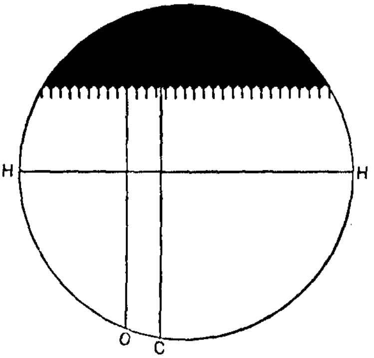

FIG. 100. Scale of the Bausch & Lomb Filar Micrometer.

short line. One complete revolution of the drum is exactly equivalent to one division of the comb; turning the drum causes the line C to move across the field. The zero line O and the horizontal cross-hair HH are fixed with respect to the comb, but the entire system of comb and zero point may be displaced at will, by a set screw, to the right or left, for convenience in measuring.

Before filar micrometers may be used for micrometry the value of one division of the ocular scale must be ascertained by means of a stage micrometer with the draw-tube of the microscope in a recorded position.

When using micrometers in which the diameter of the image of the object is measured by the movement of a micrometer screw, a number of observations should be made, always moving the cross-hairs in the same direction to eliminate "back-lash."

Method 5. — *Projecting a scale of known value into the field of view by means of substage condensers.* This ingenious and practically universal method appears to have first been suggested by Goring about 1820, and was rediscovered by Pigott in 1870,

and employed by Sorby in refractive index determination in 1878. Again revived by A. E. Wright in 1890. Thoroughly tested out by Ives in 1903 and independently rediscovered by Clendinnen in 1910.[1] And yet in spite of the many times this principle of employing a scale of variable value as a standard has been independently discovered and its desirable features pointed out, it is almost never referred to in manuals devoted to microscopy.

By means of the mirror and the Abbe condenser, it is possible to project into the plane of the object lying upon the stage, the image of a scale whose value has been ascertained. Both scale and object are magnified together and it therefore follows that no matter what may be the combination of objective and ocular employed, the value of the divisions of the scale image will remain unchanged, provided that the distance of the scale from the condenser is not altered. Any change in the distance of scale from mirror and condenser will be accompanied by a proportional change in the size of the divisions of the scale in the image projected into the plane of the object.

In micrometry, by means of ocular micrometers, we are restricted to the single ocular, containing the scale, and to a fixed draw-tube length. To obtain a different magnification, one is obliged to change objectives. This means that a new ocular micrometer value must be employed and a record kept for every change in objective. Moreover, the actual sizes of the divisions seen in the eyepiece micrometer are constant and cannot be changed.

In micrometry, by means of a scale image projected by the condenser, we have merely to record the distance of the scale from the microscope in determining its value and we may then adopt any possible combination of objectives, oculars or tube lengths, without change of value.

The scale employed may conveniently consist of a glass positive obtained by photographing any suitable scale drawn in ink or pencil, either as a linear scale or ruled in squares,[1] and

[1] See Ives, Journ. Frank. Inst., **154**, 73; Clendinnen, J. Roy. Micro. Soc., 1910, 368.

making a positive from the negative thus obtained. This screen is held in a vertical position for use in transverse slots cut in a long, narrow block of wood which is notched at the end so as to permit its being always placed in exactly the same position against the base of the microscope; the glass screen carrying the scale is illuminated from the back and the mirror of the microscope turned and tipped so as to throw an image of the scale into the condenser. Raising or lowering the condenser focuses the scale upon the object.

The value of the image of the scale is determined by means of a stage micrometer and the position of the screen in the block (i.e., its distance from the Abbe condenser) recorded. The nearer the scale-screen to the condenser the larger the image of the rulings and the farther the scale the smaller the image. To obtain the best results illuminate the screen with artificial light placed behind ground glass.

Method 6.—*Micrometry by means of the fine adjustment micrometer screw.* Most microscopes are provided with a fine adjustment so constructed with micrometer screw, accurately ground wedge or cone as to permit measurements of the thickness of objects through a determination of the amount of displacement necessary to focus the instrument upon the lower and the upper surface of the object. The amount of displacement is indicated by a graduated head or drum attached to the fine adjustment moving past a fixed index.

The value of one scale division of the drum is usually marked by the maker upon the instrument or indicated upon the table of magnifications accompanying the microscope when purchased. If this value is unknown it may be ascertained by placing an object of known thickness having parallel sides upon an object slide, clamping as tightly as possible to the slide with the stage clips and focusing first upon the slide, then upon the upper surface of the object. The difference in the fine adjustment drum readings will give the number of divisions equivalent to the thickness of the object. The thickness of the object used may be determined by placing it edgewise on the stage and measuring its thickness by any one of the micrometric methods given above.

When employing the fine adjustment for micrometric measurements, always make all movements in focusing ***in the same*** direction, otherwise a serious error will be introduced due to back-lash.

If a piece of an object slide is used for calibrating the fine adjustment, it must be remembered that we cannot focus first upon the lower surface through the slide, then upon the upper surface, to obtain its thickness, owing to the displacement of image due to the higher refractive index of the glass than that of air. This phenomenon enables us, however, to determine the thickness of transparent objects when their refractive indices are known by proceeding as described on page 200.

Micrometric measurements by means of the fine adjustment are often called for in chemical work, as, for example, to ascertain the depth of corrosion, weathering, pits, streaks, etc., in the surfaces of many different sorts of materials, or in approximating depths of penetration, or in measuring in transparent bodies the displacement of images due to changes in refractive index. This displacement enables one to calculate the refractive index of the object.

Measurement of Areas. — The methods employed for the determination of the areas occupied by microscopical objects is discussed in Chapter X, page 216.

CHAPTER VIII.

POLARIZED LIGHT — THE SIMPLE POLARIZING MICROSCOPE — CRYSTALS UNDER THE MICROSCOPE.

Few chemists realize the value of employing polarized light in connection with the microscopic examination of material to be analyzed, and few appear to appreciate the great saving of time, labor and reagents that such an application generally affords. Even a cursory examination with the most simple polarization devices is not to be ignored.

In the microscopic study of material of unknown composition, the first step of the chemist should be to subject it to polarized light.

But in order that the polarization microscope may be employed intelligently in the analysis of inorganic and organic materials, it is essential that certain fundamental concepts of optics and of crystallography be recalled; otherwise the phenomena observed may not be properly interpreted.

In ordinary light the ether vibrations are in all possible azimuths and the path of vibration of any single ether particle is constantly changing. Light so changed that the ether vibrations take place in a direction parallel to a single plane is known as polarized light. Polarized light may be either white light or monochromatic light.

All transparent (and translucent) bodies behave with respect to light waves in one of two ways: (1) they are optically homogeneous and therefore have no effect upon a beam of light sent through them, no matter what the direction may be; such bodies are called *isotropic* and exhibit but a single index of refraction; ether waves proceeding from any point are spherical; (2) they are not optically homogeneous but transmit light waves with different velocities in different directions; in this case they are called *æolotropic* or *anisotropic;* ether waves proceeding from a

point are ellipsoidal. In the first class are found the so-called *amorphous bodies* and substances crystallizing in the *isometric* or *cubic* system,[1] while in class 2, we find substances crystallizing in the *hexagonal*, *tetragonal*, *orthorhombic*, *monoclinic* and *triclinic* systems, and occasionally bodies normally isotropic but which under certain stresses and strains lose their homogeneity in one or more directions. If instead of employing ordinary light in which the ether vibrations are in all possible azimuths and where the paths of vibration of the ether particles are constantly changing, we illuminate the objects with plane polarized light in which the ether vibrations are parallel to a single plane it becomes much easier to ascertain whether the transparent object is isotropic or anisotropic.

To study the optical behavior of tiny crystals or transparent bodies, use is made of the polarizing microscope. For ordinary chemical investigation the polarizing apparatus may be quite simple, but in crystallographic and petrological studies elaborate and most carefully constructed and adjusted instruments are essential; with this latter type of instrument[2] the chemist rarely has anything to do.

The polarizing apparatus of the commonly employed chemical microscopes usually consists of two nicol prisms, one placed below the stage, the other above the microscope objective.

A nicol prism consists of a long rhomb of calcite cut lengthwise in an oblique plane forming angles of 90 degrees with the upper and lower faces of the rhombs and cemented together again with Canada balsam, see Fig. 101. If a ray of light R enters such a prism it is polarized, being resolved into two component rays vibrating at right angles to each other. One of these rays O, known as the *ordinary ray* is deflected slightly more than the

[1] Certain crystals belonging to the isometric system behave in a similar manner to optically active chemical compounds in solution, in that they possess the power of *rotating* the plane of polarization of light sent through them, either to the right or to the left, independently of the direction of transmission. Such anomalous crystals, although isotropic, may be said to be doubly refractive. This phenomenon is termed *circular polarization*.

[2] For a very comprehensive discussion of the Petrological Microscope, see F. E. Wright, Pub. No. 158 of the Carnegie Institution of Washington, The Methods of Petrographic-Microscopic Research.

other and strikes the balsam cement at such an angle as to be totally reflected; the other ray called the ***extraordinary ray***, passes through the prism and emerges completely polarized. In the diagram at S is shown a cross section of the rhomb. The direction *vb* through a shorter diameter of the prism rhomb is the ***plane*** or ***direction of vibration*** of the nicol. If, after emerging from the first prism, the extraordinary ray be sent into a second nicol so placed that its plane of vibration is coincident with or parallel to the direction *vb* of the first, the

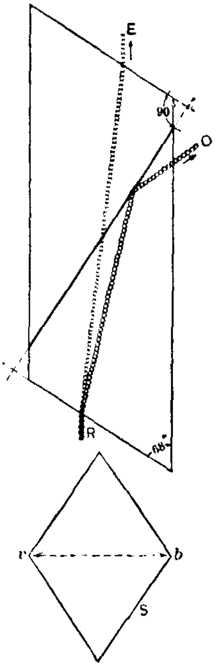

FIG. 101. Construction and Path of Light Rays in a Nicol's Prism.

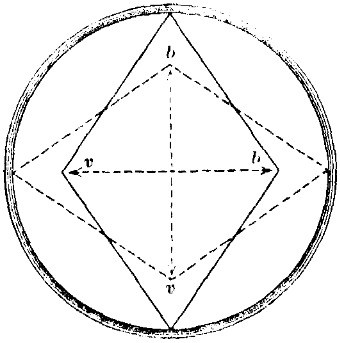

FIG. 102. Position of the Prisms with Nicols Crossed.

ray emerges parallel to its entrance direction at R. In this position the nicols are said to be *parallel*. But if the second nicol be turned through 90 degrees, thus taking a position such that its plane of vibration intersects that of the first at 90 degrees, the extraordinary ray will behave as though it were the ordinary ray and is completely turned aside. No light emerges from the upper nicol. In this position the nicols are said to be *crossed*, see Fig. 102. The arrows indicate the planes of vibration in the direction of the short diagonal.[1]

[1] In the newer polarizing microscopes, the prisms often do not have a rhombic cross section and therefore their planes of vibration do not fall in the direction of a short diagonal. The position of the planes of vibration must then be ascertained experimentally; see Weinschenk, Das polarizations Mikroskop.

The lower nicol placed below the object is called the *polarizer;* the upper nicol, above the object, the *analyzer,* since it serves to examine or analyze the light transmitted by the object. For the best results a nicol prism must be about two and one-half times as long as it is thick. A long prism for the analyzer is cumbersome and undesirable, therefore a calcite prism cemented with some resin having a different refractive index than Canada balsam is generally employed; these devices are known as Thompson, Glan, Ahrens, etc., prisms after the men inventing them.[1]

Anisotropic crystals so act upon plane polarized light passing through them as to resolve the ether vibrations into two components polarized at right angles, the planes of vibration of which are not coincident with the plane of vibration of the analyzer.

If an anisotropic substance be placed between crossed nicols and slowly turned it will be found that in certain positions some light emerges from the upper nicol while in other positions no light emerges.

In order to conveniently study the effect of the crystals upon the polarized light issuing from the polarizer, it is best that the polarizer be so mounted as to permit rotation, and in many cases it will be found a great convenience if the mount is provided with a scale graduated to indicate the degree of angular rotation. The analyzer may either slide in and out of the body-tube of the microscope or may fit above and over the eyepiece. The latter style of mounting is often preferable for general chemical laboratory work. Analyzers screwing into the body-tube just above the objective are undesirable.

For convenience the polarizer and analyzer should be so mutually arranged that when slipped in place, the position for crossed nicols is at once fixed without the necessity of testing each time for complete extinction of light.

In the chemical microscope illustrated in Fig. 3, page 20, the mounting of the polarizing nicol is provided with a stud and the

[1] For a very comprehensive description of the various types of prisms, see Johannsen, Manual of Petrographic Methods, p. 158. McGraw-Hill, 1914.

substage ring into which the polarizer fits has a notch into which this stud fits. The analyzer mounting is notched and the draw-tube of the microscope has a tiny projecting pin at *St* over which the notch slips. When working with instruments of this type, always see that the studs or pins are seated as deeply into the notches as they will go, then set the graduations of both polarizer and analyzer at zero; this will give crossed nicols and a field of maximum darkness.

The analyst should always subject his instrument to a searching examination and satisfy himself that it is properly constructed and that any measurements obtained will be accurate and reliable. The most important points to be ascertained are: (1) whether, when the graduated circles of polarizer and analyzer are each set at zero, the nicols are exactly crossed; (2) whether the directions of the cross-hairs of the oculars lie 90 degrees apart and correspond to the planes of vibration of the crossed nicols; and (3) whether the graduations on the rotating circles of polarizer and analyzer are equivalent and correspond to the graduations on the circumference of the stage.

1. **Testing for Properly Crossed Nicols.** — Remove the analyzer and objective. Set the plane mirror so as to yield the brightest possible field,[1] replace the analyzer and set both nicols at their zero point. Screen the stage (i.e., the open space between the body tube and stage) and cover the head with a dark cloth. Now observe carefully whether the nicols thus set are in their position of maximum extinction. This is done by turning one of the prisms the least amount possible and noting whether the field becomes darker or lighter. Make a number of observations, closing the eyes for a few seconds each time just before looking into the microscope.

2. **Testing the Cross-hairs.** — Having adjusted the polarizer and analyzer to the proper position of crossed nicols as ascertained above, attach a low power objective, insert a cross-haired eyepiece and place upon the stage previously centered a prepa-

[1] High grade petrographic and crystallographic microscopes are tested for properly crossed nicols by pointing them directly at the sun. See Wright, F. E., Petrographic Methods, l. c., p. 62.

ration of some salt, exhibiting parallel extinction and crystallizing in long prisms with straight edges.[1] Center a good crystal and turn the stage until the crystal extinguishes — i.e., attains a maximum darkness; its edges in this position should be exactly parallel to one of the cross-hairs. Turn the stage through 90 degrees; the edge of the crystal must now be exactly parallel with the other cross-hair. If in either case exact parallelism has not been obtained, the cross-hairs of the ocular do not correspond to the planes of vibration of the nicol prisms.

Centering the Stage. — Before it is possible to make observations relative to the behavior of crystals or other substances toward polarized light or to measure crystal or extinction angles, it is essential that the rotating stage of the microscope be accurately centered.

Place a half slide upon the stage of the microscope, holding it securely in place with a stage spring clip. Focus with a 1 inch or *32 millimeter objective upon the upper surface of the glass* slide, moving it about until a tiny defect or mark is found. Move the slide with the fingers until this mark or tiny particle is brought directly under the intersection of the cross-hairs of the eyepiece. Rotate the stage. If the stage is centered the mark or particle will remain under the intersection of the cross-hairs. If not centered, the particle will move in a circle whose circumference passes through the intersection of the cross-hairs but whose center is off to one side. Slowly rotate the stage until the mark has made a complete revolution, fixing in your mind the position of the center about which the particle has rotated. Now turn the stage until the particle or mark reaches its maximum distance from the intersection of the cross-hairs and by means of the stage centering screws bring the particle to the center about which it has rotated. Move the slide on the stage with the fingers until the particle or mark again falls directly under the cross-hairs. Rotate the stage. It will now be found that the stage is nearly but not quite centered. Rotate again, noting as before the path of the mark or particle, and the position

[1] For this purpose allow a drop of a saturated solution of mercuric chloride, or of ammonium sulphate to crystallize very slowly upon an object slide.

of the center of the circle through which the particle has moved. Bring the particle to this center and again test the accuracy of the rotating stage. Absolutely perfect centering throughout an entire rotation of 360 degrees is seldom possible in the case of medium-priced instruments. Providing the centering is good through a half rotation (180 degrees) satisfactory measurements may be obtained.

Since microscopes are commonly provided with non-centering revolving nosepieces, centering the stage for one of the three objectives will not answer for the other two. Each time one objective is substituted for another by turning the nosepiece it is usually necessary to recenter the stage. A very convenient device for approximate centering is to have a disk diaphragm just fitting into the stage opening, the orifice of the diaphragm being a minute pinhole. To center the stage lay the diaphragm in place, focus upon the pinhole and bring the point of light exactly under the cross-hairs by means of the stage centering screws; or a circle of drafting ink, the exact diameter of the stage opening, can be drawn on thin ground-glass or tracing cloth with a dot at the center; this serves a purpose similar to that of the diaphragm.

3. **Testing the Graduated Circles upon Polarizer and Analyzer.** — Although the zero points may be properly set, it may happen that the graduation in degrees of one of the nicols is incorrect. Turn one nicol a few degrees, note the scale reading, then turn the other until extinction results; read the scale; the reading upon each circle should be the same number of degrees.

4. **Testing the Graduated Circle upon the Circumference of the Stage.** — Place at the center of the stage a preparation containing long prisms of a salt exhibiting parallel extinction. With the nicols crossed at zero, select a good crystal, center it and bring its long prism edge coincident with a cross-hair. Now turn polarizer and analyzer several degrees, each being rotated an equal distance and therefore maintaining the relative positions of crossed nicols. Read the graduated circle on the analyzer, read the position of the stage and rotate the stage until the crystal extinguishes. Read the stage circle. The angular rotational

displacement should be the same number of degrees as that of the nicols. In like manner compare a number of different segments of the stage graduations. In all cases several observations should be made at each position, the mean of all the readings being taken.

Polarization without a Nicol Prism. — When employing the hot stage microscope it is sometimes essential to obtain polarized light, yet have the substage kept clear. A polarizer of the nicol or other analogous prism type is obviously impossible. Recourse must then be had to polarization by reflection. A variety of devices have been proposed, one of these is illustrated in the microscope shown in Fig. 7. In this type the light is twice reflected below the stage with the result that the object is illuminated by transmitted plane polarized light. The analyzer may consist of any convenient sort of prism, placed either above the eyepiece or mounted to slide in and out of the body-tube. The best results are obtained from reflections from tourmaline plates but Cheshire[1] has shown that fair results can even be obtained from a thin plate of glass, ground on one side, and blackened upon the ground surface. Light reflected from such a plate is polarized; the maximum polarization is obtained when the angle of the incident light is 56½ degrees. The plate may be mounted permanently at this angle and arranged to slip into the substage ring, or in chemical work involving heating with a flame supported by the substage the plate may lie upon the work table, its angle of inclination being obtained by means of a protractor and the plate held in place by means of plasticine for a temporary mounting. A very simple arrangement of the Cheshire plate may then be as indicated in the diagram, Fig. 103, the support being an ordinary object slide, while the polarizing plate consists of a half-slide, ground upon its lower surface by rubbing upon a piece of glass carrying very fine emery and turpentine. After cleaning off the abrasive, the ground surface is blackened. A small mass of plasticine is placed upon the slide and the polarizing plate is pressed down until the proper inclination is obtained as indicated in the diagram.

[1] J. Quekett Micro. Club, **8**, 353.

Thus prepared, this polarizer is pushed into the opening in the horseshoe base of the microscope until the center of the plate falls in the optic axis of the microscope, the mirror of the instrument having been removed or swung aside. Light thrown upon the plate will be polarized and reflected in the line of the optic axis of instrument.

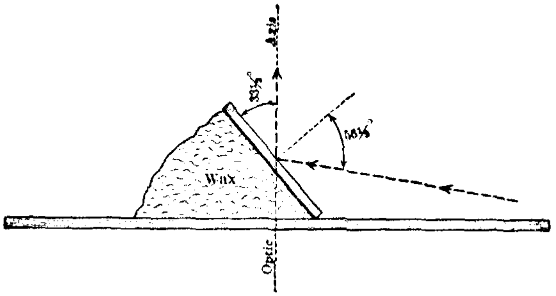

FIG. 103. Obtaining Polarized Light by Reflection.

To further assist the student in the application of the polarizing microscope, the following brief synopsis is given to refresh his memory relative to his crystallographic knowledge.

Fundamental Crystallographic Concepts. — According to the viewpoint of the crystallographer, crystals are polyhedra, bounded by plane surfaces, whose forms are dependent upon physical and chemical properties and governed by the correlation of certain internal forces or attractions which we may call a definite internal grouping or arrangement of molecules or atoms.

It must be remembered, however, that the chemist in recent years has discovered a number of substances, appearing when illuminated with ordinary light as thick syrupy liquids, yet which yield optically most of the phenomena observed in solid crystalline bodies. To this interesting class of compounds the terms liquid crystals, crystalline liquids, or flowing crystals have been given.

It appears probable that only chemical elements and their definite compounds form crystals.

Crystals may form when a solid phase separates from a liquid.

The liquid may be either a solution or a molten mass. Crystals may also form from vapors on cooling.

The bounding polygons of a crystal are called faces, all of which are symmetrically placed with reference to systems of imaginary lines termed axes.

The angles formed by the meeting of these bounding polygons are called interfacial angles, which may be acute, right or obtuse, and are never reëntrant.

A study of the interfacial angles of chemical compounds is of the utmost importance, since these angles are constant for a compound, in the case of similar faces, no matter what its origin.

Crystals are classified into six systems according to their symmetry. A plane of symmetry is any plane which passed through a crystal will divide it into two parts, one-half being the mirror image of the other.

Crystal axes are usually designated by the letters, a, b, c, of which the c axis is always the vertical, a the forward and back, and b the right and left.

The six different systems (so-called), to which crystal forms may be referred, differing from one another by the varying of the symmetry of the crystals, are also often, but less correctly, defined as differing by variations in the relation of the axes. It has been proved by Groth that there can be only four kinds of axes of symmetry — twofold (binary), threefold (ternary), fourfold (quartenary) and sixfold (senary). The equivalent faces become coincident through revolutions of 180 degrees, 120 degrees, 90 degrees and 60 degrees respectively. In crystallography, by symmetry is always meant symmetry of direction, not of actual form or position. It follows, therefore, from the above facts, that the crystal angles are constant, definite and characteristic for each crystal form, and for each substance thus crystallizing, and that substances may often be identified by the measurement of their crystal angles.

Slow chemical replacement processes sometimes cause more or less complete changes in the composition of a substance without affording an opportunity for an accompanying change in

crystal form. Such replacement forms are met with in minerals and are known as *pseudomorphs*.

When a crystalline substance is found with its own crystal outlines it is said to be *idiomorphic*.

When a crystal has opposite ends different, due to dissimilar faces, it is termed *hemimorphic*.

Two crystals may unite to form a double or *twin* crystal. Unions in threes or fours are less frequent.

Many chemical compounds are known, however, which form more than one kind of crystal. Such substances are said to be *dimorphous*, *trimorphous* or *polymorphous*, according to the number of observed kinds of crystals which they form.

The six crystal systems are as follows, each comprising the number of simple generic forms indicated:

System	Number of Simple Generic Forms
1. **Isometric**	Seven.
2. **Tetragonal**	Seven.
3. **Hexagonal**	Seven.
4. **Orthorhombic**	Four
5. **Monoclinic**	Four.
6. **Triclinic**	Four.

A crystal is said to be *holohedral* when *all* its planes are present. When one-half the planes are present (in accordance with an established law) the crystal is *hemihedral;* and if only one-quarter the possible planes, the crystal is called *tetartohedral*.

Crystal aggregates uniting in such a manner as to yield branching, fern-like, moss-like or tree-like forms are called *dendrites*, and the mass is termed a *dendritic mass*. If the aggregate consists of more or less long hair-like twisted, curved or bent crystals, it is said to have a *trichiten* structure, and the individual hair-like bodies are called *trichites*. But when the tiny long narrow crystals are straight and resemble needles, the crystals are said to be *acicular*. Tiny globular masses of radiating, acicular crystals are called *spherulites* or *sphero-crystals*. When these radiating aggregates consist of anisotropic crystals they

are characterized by a more or less symmetrical black cross if viewed between crossed nicols.

Very rapid crystallization gives rise to the formation of crystals imperfectly developed, the growth generally being most rapid in the direction of the axes or of the boundaries of the facial polygons. The bodies resulting are called ***skeleton*** or ***skeletal*** crystals.

Under like conditions of formation, crystalline compounds always separate not only in the same crystal system, but will assume each time the same geometrical form; this characteristic form is called the *habit* of the compound and upon this property microchemical methods of analysis are based. Providing we can control the conditions influencing the formation and the separation of a crystalline compound upon a glass object slide, we may be reasonably certain that in every experiment tried not only will we obtain exactly similar crystals but also that the great majority of the crystals will always lie upon the slide in a similar position.[1]

Crystals in the course of their growth invariably occlude mother liquor and furthermore will be found to contain inclusions of air or gases, and by virtue of adsorption or solid solution phenomena will contain foreign matter which may be present. Theoretically, the separation of an absolutely pure crystal of a salt consisting of a single solid substance alone is an impossibility when dealing with a mixture.

When the foreign matter present is such that the adsorptive power of the salt for it is great, not only may the crystal habit be profoundly changed but the color and the characteristic properties of the salt may also be altered. It is possible to thus obtain, by the means of vegetable and aniline dyes, colored crystals from colorless inorganic salts.[2]

Fundamental Facts — Optical Crystallography. — In addition

[1] E. von Fedorov has recently compiled an elaborate set of tables in the Zeit. Kryst. Min., **50**, 513, whereby it is possible to identify a compound through its crystallographic habit and properties. It is suggested that this mode of analysis be called Crystallo-Chemical Analysis.

See also Orelkin and Pigulevski, J. Russ. Phys. Chem. **46**, 227.

[2] See Gaubert, Recherches récentes sur les facies des cristaux, Paris, 1911.

to their characteristic morphology, crystals exhibit certain physical and optical properties according to the crystal system to which they are referred. Chief among these optical properties made use of by the chemist is the behavior of the crystals towards polarized light.

Optically, crystals are either singly refractive (isotropic) or doubly refractive (anisotropic). If isotropic, they will show no change when rotated upon the stage of the microscope between crossed nicols. If anisotropic, they will appear alternately light and dark as the stage is turned.

If, therefore, a crystal be placed upon the stage of a polarizing microscope near the center of the field between crossed nicols and the stage turned, the crystal will behave in one of two ways: 1. It will remain dark throughout a complete rotation of the stage, that is, there is no change in its appearance in the dark field. 2. As the stage is turned the crystal will alternately become bright or colored, and alternately disappear or become dark (extinguish). In this case two possibilities arise. Either the crystal disappears (extinguishes) when its long edges coincide with or are parallel to the cross-hairs, and is brightest midway between, or the position of extinction is not on the cross-hairs, but lies a little inclined to (is oblique to) the cross-hairs. In the former case we speak of the crystal as having *parallel extinction*, and in the latter as having *oblique extinction*. Crystals exhibiting a lozenge or equilateral rhomb outline and which extinguish when the cross-hairs bisect the acute and obtuse angles of the lozenge (a variant of parallel extinction) are sometimes said to exhibit *symmetrical extinction*.

Anisotropic or doubly refracting crystals further fall into two groups: I. Those which exhibit no double refraction in one direction through the crystal — *uniaxial crystals*. II. Those which exhibit no double refraction in two directions — *biaxial crystals*.

Those directions parallel to which there is no double refraction have been designated as the *optic axes*. The directions vary slightly according to the wave length of light but for all practical purposes may be considered as constant for white light.

Crystals belonging to the **tetragonal** and **hexagonal** systems

are *uniaxial*. Those of the **orthorhombic, monoclinic** and **triclinic** systems are *biaxial*. When doubly refracting crystals lie in such a position that their optic axes are parallel to the optic axis of the polarizing microscope, the nicols being crossed, the crystals remain dark when the stage is rotated; in other positions the crystals will appear alternately bright and dark. The optic axis of a crystal may thus be found experimentally. If an anisotropic crystal remains dark (on turning the stage) in one position only it is uniaxial; if dark in two positions it is biaxial.

To obtain a clue as to the probable system of a substance yielding polarizing crystals, find the position of extinction, read the stage and remove the analyzer. Now turn the stage until the centered crystal has its crystal boundaries or crystal cleavage lines lying coincident with the cross-hairs. Read the stage again. Try a number of crystals in turn. If the angle is 0 degrees or 90 degrees, in all the crystals, the system is either tetragonal, hexagonal or orthorhombic, i.e., the crystals exhibit parallel extinction. If the angle is not 0 degrees or 90 degrees the crystals are monoclinic or triclinic.

The tetragonal or hexagonal systems are not to be differentiated save through their crystal form and crystal cleavage.

Directions of Vibration, or Axes or Directions of Elasticity. — In all the doubly refracting crystals there are certain directions through them in which the light rays advance or are transmitted with a greater velocity than in other directions.

"The directions of vibration (found always to be at right angles to each other) of the light rays which advance with maximum or minimum velocity and a third direction at right angles to the plane of these directions (corresponding to some ray with an intermediate velocity) are called *Axes of Elasticity*."[1]

In the orthorhombic system the axes of elasticity coincide with the crystallographic axes.

In the monoclinic, one axis of elasticity coincides with the b-axis, the other two axes of elasticity are in a plane of symmetry at right angles to b, but are coincident with neither the c-axis nor the a-axis.

[1] Luquer, Minerals in Rock Sections. New York, 1898.

In the triclinic system no axis of elasticity is parallel with a crystallographic axis.

For the relations between axes of elasticity and refractive index, see Chapter IX, page 194.

Observations with Converging Polarized Light. — Strongly converging polarized light offers one of the most valuable methods of petrographic microscopic research, but it possesses only a very restricted value for the chemist in microchemical qualitative analysis. Although it affords a means of differentiating between crystal systems and thus yields information not obtainable by parallel polarized light, useful optical phenomena with converging polarized light are obtainable only when the light is sent through crystals in the direction of the optic axis in the case of uniaxial crystals or in a direction perpendicular to the plane of the acute bisectrix[1] in the case of biaxial crystals.

Tiny uniaxial crystals will occasionally be found in a preparation lying in such a position as to be available for study with converging polarized light; but in the case of biaxial crystals, sections must be cut. It is obvious that cutting thin sections of tiny individual friable crystals of the vast majority of the salts met with in analytical work is impracticable or impossible. Moreover, the information eventually obtained would not warrant the expenditure of time and patient labor required.

Interference Figures. — When a section of a uniaxial crystal cut perpendicular to the optic axis is placed upon the stage of the polarizing microscope, illuminated with strongly converging polarized light and the observer looks into the microscope with crossed nicols, but with no eyepiece in place, he will see a black cross with a series of spectrum-colored concentric circles.[2] This image is known as the *interference figure.*

Biaxial crystals in sections normal to the acute bisectrix yield (in typical cases) curved black bands or an asymmetric black

[1] The acute bisectrix is a line bisecting the angle formed by the intersection of the two optic axes.

[2] Or in the case of circular polarization, the arms of the cross do not intersect but leave a central light space.

cross superimposed upon spectrum-colored lemniscates or hyperbolas.[1]

In order to observe the interference figures with the chemical microscope, place the condensing lenses above the polarizing nicol, center the crystal or crystal section. Use a $\frac{1}{6}$ or $\frac{1}{8}$ inch or 4-millimeter objective. Focus the preparation and light well. *Remove the eyepiece*, place the analyzer in its proper position upon the top of the microscope tube, cross the nicols and look into the instrument. The interference figure will appear as a tiny image situated far below the eye. Petrographic and crystallographic microscopes are generally provided with a specially constructed lens which slides into the microscope tube above the analyzer and below the eyepiece. With this device (Bertrand lens) the interference figure is greatly enlarged and it is unnecessary to remove the ocular, but in all instruments without this special device and where the analyzer fits above the ocular, the ocular *must be removed* in order that the interference figure shall be visible.

Interference, or axial figures as they are also sometimes called, must not be confused with the black cross observed in spherulites and starch granules placed between crossed nicols.

Interference or Polarization Colors. The Selenite Plate. — As stated above, when light enters an anisotropic crystal it is polarized or resolved into two rays vibrating at right angles to each other. These two rays are propagated at different velocities, hence one component is slightly retarded and upon emerging from the crystal one ray is slightly behind the other in rate of vibration; they are, therefore, vibrating in a different phase. If the crystal lies between crossed nicols, these rays upon entering the analyzer are again split, and owing to the difference of phase the waves interfere and color results. Hence the crystal will appear more or less colored. The brilliancy of color will depend upon the character (strength) of double refraction and the

[1] For a very comprehensive discussion of interference figures see Weinschenk — Das Polarizations Mikroskop, or Weinschenk-Clark, l. c., Chapter V. See also Moses, The Characters of Crystals, N. Y., 1899. Luquer, Minerals in Rock Sections, N. Y., 1898. F. E. Wright, Petrographic Methods, Chapter V, l. c. Johannsen, Petrographic Methods.

thickness of the crystal. In the position of extinction there is of course no color.

If the value of the double refraction is known, the thickness of the crystal may be calculated and vice versa.[1] Polarization colors are of greater value in petrological investigations than in chemical analysis. Nevertheless, the analyst should never neglect to note the colors and their intensities when examining preparations between crossed nicols. A valuable clue as to the probable nature of the material under examination may often be thus obtained, since if brilliant polarization colors are seen we may conclude that the substance has a high double refraction and we may thus eliminate from further consideration substances whose double refraction is so weak as to render brilliant interference colors impossible.

It is often difficult to determine, between crossed nicols alone, whether or not a substance is anisotropic if its double refraction is very weak, and only the faintest tints of gray are produced. Recourse is then had to a selenite test plate cut of such a thickness and orientation that when placed between the nicols with its direction of vibration at 45 degrees to the planes of vibration of the nicols a purple-red interference color is obtained. This particular shade, known as *red of the first order*, is the most useful of test plate interference colors. When such a test plate is placed either above or below the very weakly polarizing preparation being studied the change of phase in the transmitted light waves is such as to produce a contrasting color. The entire field is colored red; the polarizing materials or crystals will therefore appear differently colored, according to their thickness, upon a red background. Double refraction so weak as to pass unnoticed will thus be readily recognized.

The selenite is also most useful in the determination of extinction angles (q.v.), in ascertaining the optical sign + or − of biaxial crystals, and in measuring the thickness of thin polarizing rock and crystal sections.

[1] For a full and comprehensive discussion of interference colors and their application in microscopy the student is referred to Weinschenk-Clark, Petrographic Methods, pp. 73–87, or Johannsen, Petrographic Methods.

One of the best examples of the every-day practical application of the polarizing microscope and selenite plate by chemists is in the differentiation of pure fresh butter from very old, or process butter or oleomargarine. The fat of fresh, unmelted butter thus examined yields a uniform red field. Process butter, melted butter and oleomargarine on the other hand yield a field mottled in many colors.

For use with the chemical microscope the selenites are usually obtained as disks with two black dots at opposite ends of a diameter, Fig. 104. These dots locate the direction of vibration of the test plate as shown in the figure by the dotted arrow. These selenite disks are employed as follows: After centering and focusing the preparation, the selenite disk is laid upon the eye-lens of the ocular in such a position that its direction of vibration bisects the angles of the cross-hairs, as shown in the diagram. Petrographic microscopes are generally supplied with test plates mounted in a metallic carrier arranged to slide into the tube of the microscope in a slot provided for this purpose. The direction of the vibration is in this case indicated upon the mount by an arrow.

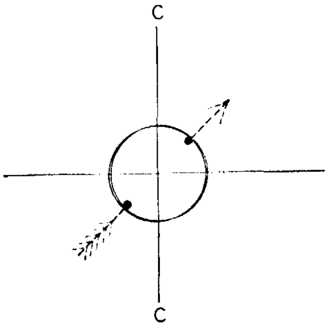

FIG. 104. Selenite Disk. The Arrow Indicates the Direction of Vibration.

Absorption. Pleochroism. — Many compounds have the power of absorbing part of the light rays vibrating in certain planes and therefore if viewed through the polarizing microscope with the analyzer removed will exhibit a change of light *intensity*, in certain positions. This property of crystals known as *absorption* should not be confused with a change of color.

All anisotropic substances to a greater or lesser extent remove the rays of certain colors in certain planes from white light sent through them. This property when sufficiently pronounced to be observable with the normal human eye is termed pleochroism. Substances are tested for pleochroism by placing

them upon the stage of a polarizing microscope, *removing the analyzing nicol* and *rotating the polarizer.* If the substance under examination is pleochroic, it will change in color with the rotation of the prism. In the event of the polarizer being fixed and incapable of rotation, rotate the stage. Always carefully shade the preparation with the hand in order to prevent as much as possible confusing reflections.

If the phenomena observed involve a two-color change the crystals are said to be *dichroic;* if a three-color change *trichroic.* Uniaxial crystals can exhibit only a two-color change; biaxial crystals may be trichroic.

Isotropic crystals possessing a high adsorption power for certain coloring matters may become in the process of their growth highly colored. These crystals, although still retaining their isometric habit are often highly pleochroic.

Practical application may be made of the phenomenon of pleochroism in differentiating between different textile fibers and different paper fibers stained with certain aniline dyes. Some species of fiber exhibit strong pleochroism and others weak.

The Measurement of Crystal Angles and Extinction Angles.—Since the interfacial angles of crystals of chemical compounds are always constant for similar faces no matter how the compound may have been prepared, it is obvious that angle measurements may often prove of the greatest value in the identification or differentiation of compounds or of crystal systems. When crystals are of sufficient size to be handled determinations of the values of angles by means of some form of goniometer are fraught with no great difficulties, but when the crystals are microscopic and cannot satisfactorily be orientated, the problem becomes exceedingly difficult.

Fortunately, the chemist is rarely if ever called upon to make very accurate angle measurements; rapid approximate readings are usually sufficient for analytical work. Moreover, so-called chemical microscopes are incapable of yielding angular measurements of the degree of accuracy required in crystallographic investigations.

Great accuracy on the part of the analyst is seldom essential,

since his object is merely to ascertain whether the crystal under examination is, or is not, a certain compound. In simple inorganic analyses angle measurements are rarely resorted to, but in the examination of organic compounds and in the case of mixtures of inorganic and organic substances, the measurement of angles may often prove a most rapid means of differentiation.

Only thin, well-formed crystal plates with practically perfect edges should be selected for measurement. Avoid high magnifications. The rotating stage having been previously centered, the preparation is moved with the fingers until the selected crystal is brought under the cross-hairs of the eyepiece. One of the bounding edges of the angle sought is made *exactly parallel* to *and almost in coincidence* with one of the cross-hairs; the position of the graduated circle of the stage is noted and the stage is rotated until the other bounding edge of the angle becomes parallel with the same cross-hair. The graduated stage circle is again read. The difference between the two readings is the angle sought.

If it is known that the cross-hairs in the eyepiece are exactly at right angles, a slightly quicker method consists in measuring the complement of the angle and deducting it from 90 degrees. Or, if the angle be obtuse, measure the amount that is greater than 90 degrees. This method does not necessitate as careful centering of the stage, and can, therefore, be used with high powers with sufficient accuracy for analytical work. It is essential in all measurements of crystal angles that the instrument be most carefully focused upon an edge, and that care be taken to avoid error due to the projection of an image of another edge through the crystal. In the case of very transparent crystals it is sometimes difficult to tell which is the proper line (edge) to employ, unless the crystal is thin.

For the measurement of solid angles where several planes meet, the crystals must be of sufficient size to permit their being turned first in one position, then in another. Cementing to the point of a needle (method of Kley[1]), imbedding the head of the needle in a cork and cementing the cork to a glass slip will permit

[1] Kley, Rec. trav. chim. Pays-Bas, **19** (1900), 13.

of the crystals being sufficiently easily orientated to yield fairly accurate measurements.

Or, we may employ the glass hemisphere (see page 117), or the orientating apparatus of Klein (page 117).

Microscopes having fixed stages require the employment of a goniometer eyepiece, consisting essentially of a cross-hair system rotating in conjunction with a graduated circle. With this device the centered crystal remains in a fixed position and the ocular cross-hairs are rotated in such a manner that one of them is first made parallel to one boundary edge, and then to the other edge of the angle sought.

Extinction Angles.[1] — The extinction angle of a crystal may be defined as "the angle between an axis or direction of elasticity and some known crystallographic direction." The crystallographic direction usually adopted by chemists, where the extinction angle is employed as one of a series of identity tests, is the longest edge of the crystal or in the case of rhomb-shaped crystals the line bisecting the acute angles.

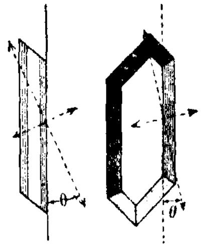

FIG. 105. Extinction Angles, θ, θ.

In the case of crystals exhibiting parallel extinction the extinction angle may be considered as being 0 degrees. Crystals exhibiting oblique extinction, i.e., those of the monoclinic and triclinic systems yield *two* extinction angles; but it is customary to record as the extinction angle the *smallest angle* obtained between the length of the crystal (cleavage lines or edges being used), and the nearest axis of elasticity. In Fig. 105 the extinction angles may be considered as the angles θ.

If the analyst is sufficiently well-trained in crystallography to be able to locate the c-axis he may record as the extinction angle the angle formed between the c-axis and the nearest axis of elasticity. This value is that most often taken by crystallographers as the characteristic extinction angle.

[1] See Wright, Measurement of Extinction Angles; Am. J. Sci. (4), **26** (1908), 349.

Since in feebly polarizing crystals the exact point of extinction is not easily determined, a measurement of the angle is difficult and annoying unless a selenite test plate is employed (see page 175). When employing a selenite proceed as follows: Place the test plate, red of the first order, so that the plane of its direction of vibration bisects the opposite quadrants of the cross-hairs of the ocular. With the nicols crossed bring a typical thin crystal so that its long edge (or its c-axis) lies parallel to a cross-hair. A red field is seen with the crystal of some contrasting color. Read the graduated stage circle. Now slowly rotate the stage until the crystal acquires *exactly the same color* as the field; the plane of vibration of the selenite and that of the crystal are now coincident. Read the stage again. The reading will give an extinction angle. Next ascertain whether it is the smaller of the two possible angles for this position of the crystal. Make similar measurements upon a number of other crystals.

Never depend upon observations made upon a single individual. Check the readings by again making the crystal parallel to the cross-hairs and turning the polarizer or analyzer until the colors of field and crystal are identical; read the graduations on the nicol mounting; the angles observed should be identical.

CHARACTERISTICS OF THE SIX CRYSTAL SYSTEMS. SUMMARY.

The chief characteristic features exhibited by individuals of the six different crystal systems which will prove of assistance in microchemical analysis may be summarized as follows:

ISOMETRIC SYSTEM (Cubic System).

The three crystallographic axes are all at right angles. Each axis is one of four-fold symmetry. All axes are of like value, hence any axis may be made the c-axis.

Cleavage usually parallel to the faces of the crystal and symmetrical with reference to the crystallographic axes.

Optically isotropic, hence there is no change between crossed nicols. No interference figures.

A single refractive index, independent of direction.

TETRAGONAL SYSTEM.

Two equal horizontal crystallographic axes at right angles to each other and to the vertical. Vertical or c-axis either longer or shorter than the other two. c-axis is one of fourfold symmetry. Each horizontal axis is one of twofold symmetry.

Interaxes (lines) bisecting the interaxial angles between a- and b-axes may also serve as subordinate axes of symmetry.

Cleavage, rectangular.

Uniaxial.

Optic axis coincident with c-axis. Hence in one position isotropic; in other two, parallel extinction.

Crystals four-sided or eight-sided or lath-shaped or six-sided. Four- or eight-sided crystals isotropic (seen on end). Crystals lying on their side give parallel extinction.

Interference figure: symmetrical cross with concentric rings.

Index of refraction, ϵ in direction parallel to optic axis; ω index in the plane normal to the optic axis.

HEXAGONAL SYSTEM.

Vertical or c-axis is at right angles to the three horizontal axes at their point of intersection. Horizontal axes intersect at angles of 60°. c-axis may be longer or shorter than the horizontal and is an axis of sixfold symmetry. Each horizontal axis is one of twofold symmetry.

Interaxes may serve as subordinate axes of symmetry.

Cleavage lines usually intersect at angles of 60°.

Uniaxial.

Optic axis coincident with c-axis.

Crystals three-sided or six-sided, or long rectangles showing three faces. Three-angled and six-angled forms usually isotropic (seen endwise). Long crystals *lying on their sides exhibit parallel extinction.*

Interference figure: symmetrical black cross with concentric spectrum colored rings. Tetartohedral crystals are circular polarizing.

Indices of refraction have same relations as in tetragonal system.

ORTHORHOMBIC SYSTEM.

Three axes at right angles to each other, of unequal length. Each axis is one of twofold symmetry. Any axis may be made the vertical.

Cleavage in direction of diametral planes.

Biaxial.

Optic axes: since any crystallographic axis according to convenience may be made the c-axis no relationship may be formulated between the optic and crystallographic axes.

Extinction parallel[1] in all three positions of the crystals.

Three indices of refraction, least index in direction of greatest elasticity, greatest index in direction of least elasticity.

MONOCLINIC SYSTEM.

Three axes of unequal length. The a-axis and c-axis are oblique to each other. The b-axis is perpendicular to the other two at their point of intersection. The b-axis is an axis of twofold symmetry.

[1] In biaxial crystals complete extinction is obtained only with monochromatic light.

Cleavage dependent upon crystal species.
Biaxial.
Extinction parallel in two positions, oblique in the third. (This does not apply to *sections* through a crystal.)
Three indices of refraction.

TRICLINIC SYSTEM.

Three crystallographic axes, all of unequal length and oblique to one another. There are no axes of symmetry.
Cleavage dependent upon crystal species.
Biaxial.
Extinction oblique in all three positions.
Three indices of refraction.

EXPERIMENTS DEALING WITH CRYSTAL FORMS AND OPTICAL PROPERTIES.

Center the stage and test graduations and accuracy of polarizing apparatus.

Study the following salts, make sketches and note their behavior between crossed nicols:

Isometric System.
Sodium chloride; potassium iodide; barium nitrate; ammonia alum; chrome alum; arsenic trioxide; sodium chlorate (circular polarization).
Hexagonal System.
Lead iodide; iodoform; cadmium iodide; normal sodium phosphate; strontium chloride; strontium antimonyl tartrate; sodium nitrate.
Tetragonal System.
Potassium arsenate; mercuric cyanide; potassium copper chloride; urea; strychnine sulphate.
Orthorhombic System.
Ammonium sulphate; mercuric chloride; potassium antimonyl tartrate; potassium nitrate; potassium sulphate; sodium nitroprusside; zinc sulphate; uranyl acetate.
Monoclinic System.
Potassium ferrocyanide; potassium ferricyanide; sodium ferric oxalate; ammonium persulphate; potassium chlorate; barium chloride; nickel chloride; tartaric acid; saccharose.
Triclinic System.
Copper sulphate; potassium bichromate; potassium persulphate; boric acid; manganous sulphate.
Pleochroic Salts.
Copper acetate; iodoquinine sulphate; potassium (or sodium) ferric oxalate; potassium cobalt sulphate; silver bichromate; potassium chromium oxalate.

In a watch glass place a few drops of benzene, add a few crystals of quinone, stir until dissolved. Add a few crystals of resorcin, stir. Remove a drop to a slide and allow it to deposit crystals by spontaneous evaporation. The crystals will be found to be strongly pleochroic.

Note. The experiments outlined above have dealt with normal well-formed crystals whose habits could be ascertained with but little difficulty. Abnormal

or imperfect forms are, however, very common in the case of many compounds and especially where several substances are present in solution.

The presence of colloids in the solution will in most cases either wholly inhibit crystallization or will so greatly modify the form of the crystals separating as to prevent their being identified as the substance which has crystallized out. In the following experiments the effect of colloids will be seen.

EXPERIMENTS DEALING WITH ABNORMAL CRYSTALLIZATIONS.

1. Dissolve two or three fragments of sodium chloride in water, concentrate and examine the crystals separating. Add a drop of a concentrated solution of gum arabic, warm gently until all the salt has dissolved, concentrate to crystallization at as low a heat as possible and note well the change in the character of the crystals separating. Instead of cubes and rectangular plates skeleton forms and dendritic masses appear.

2. Try a similar experiment using ammonium chloride. In neither case can well-defined crystals be obtained, but the appearance of the dendritic masses has changed under the influence of the colloid.

3. Place a tiny drop of water on a slide on a piece of white paper, add ferric chloride until a distinct yellow color is obtained. Now add two or three fragments of ammonium acetate, stir gently until dissolved, but *do not heat.* Crystallization will soon set in. The crystals of ammonium chloride now separating will be well-formed cubes or the skeletons of cubes.

4. Try crystallizing mercuric chloride in the presence of gum arabic.

5. Place next to a drop of a solution of lead nitrate a solution of potassium iodide. Cause the drops to flow together. Note that lead iodide is formed in shining iridescent plates. To a drop of a solution of lead nitrate add a fragment of gelatin, warm gently to dissolve the gelatin. Place a drop of potassium iodide solution next to the test drop just prepared and cause the iodide solution to flow into the test drop. It will be evident that lead iodide has been formed because of the yellow zone at the point of contact, but no crystals will separate.

6. To a drop of olive or cottonseed oil on a slide add stearic acid and warm gently until the drop is clear. On cooling, radiating masses of thin plates separate. Examine between crossed nicols.

7. Place a few fragments of sulphonal upon a slide, lay a cover glass upon the material and heat until the sulphonal melts. A very thin molten film of the compound results, which crystallizes on cooling. Examine between crossed nicols.

8. Dissolve a very minute amount of barium chloride at the corner of a slide; add a fragment of sodium acetate. Dissolve a fragment of oxalic acid in a drop of water close to the drop of barium chloride solution. Cause the oxalic acid to flow into the other drop. In a few seconds large branching aggregates in the form of radiating bundles and sheaves of fibrous needles of barium oxalate will be seen.

Make a fresh solution drop of barium chloride; add sufficient ferric chloride to give the drop a distinct yellow color. Now add sodium acetate as before; stir until dissolved. The drop should now acquire a reddish tint. Into this test drop cause oxalic acid to flow. Long hair-like crystals (trichites) separate instead of branching aggregates.

9. Prepare a drop of an almost saturated solution of chromium chloride. Add a little solid mercuric chloride and warm gently until dissolved. Concentrate to crystallization. Trichiten crystals of the double chloride separate.

10. Prepare a solution drop of sodium asparaginate. Try to obtain crystals by concentration. Start crystallization by "seeding;" that is, crush in the drop the smallest possible piece of the salt.

CHAPTER IX.

THE DETERMINATION OF REFRACTIVE INDEX BY MEANS OF THE MICROSCOPE.

All transparent and translucent objects when immersed in liquids yield images in the microscope which are bounded by dark lines or bands or which appear to be surrounded by a colored fringe or halo. The width or thickness of these dark or colored contours depends upon the magnitude of the difference between the refractive indices of the two phases (the solid and the liquid), upon the dispersive power of each and upon the method of illumination employed.

Contour bands appear when the refractive index of the solid is either greater or less than that of the liquid in which the solid is immersed. As the index of refraction of the solid approaches closer and closer to that of the liquid the dark bands decrease in prominence, and finally vanish when both object and liquid have the same refractive index. If both have also the same dispersive power, the same light-absorbing power and the same color, the object will be invisible in the liquid. But complete disappearance is impossible in practice since these conditions can never be all fulfilled and since moreover it is next to impossible to obtain crystals or other solids which are so perfect as to be free from air bubbles, fractures or cleavage planes or which contain no occlusions of dirt, of mother liquor or of foreign salts. The vanishing of the black lines is therefore the criterion upon which we must depend for an indication that the solid and the liquid have the same index of refraction.

It is evident, that, given a series of liquids of known refractive index, if a solid of unknown index be immersed in these, one after another, until the black contours bounding the image just disappear, the index of this particular liquid is the index sought of the solid.

In like manner if we have a series of crystals, or fragments of

transparent solids whose indices of refraction we know, it is possible to roughly ascertain the index of a given liquid.

The index of refraction is a constant for any given substance of definite composition. Its determination often affords a ready means of identification or differentiation and in many instances is in fact the only simple means at our command for the recognition of a compound.

Although the identification of compounds through determinations of their refractive indices by the immersion method and the microscope has long been practiced by mineralogists, petrologists and microscopists, it is only within the last few years that chemists have awakened to the value of the data so easily obtained.

A determination of the refractive index is of special value in the qualitative analysis of soils, sands, mineral fragments, etc., in the study of crystalline residues, in the differentiation of isomeric compounds and in the study of materials which, although pure, cannot properly be separated from foreign matter.

In order to determine the refractive index of crystalline solids we may proceed as described below:

Determination of the Refractive Index of Isotropic Substances. —One or more tiny fragments or crystals of the material are placed upon a *clean* slide, a small drop of a liquid of known refractive index is placed upon a small, scrupulously clean cover glass and the cover with its drop is inverted and laid upon the solid under investigation, care being observed in lowering the glass with its drop of liquid to avoid the formation of air bubbles. Place the preparation under the microscope with the Abbe condenser[1] raised as high as it will go. Focus with a 32 millimeter or 16 millimeter objective. Under these conditions the preparation will probably be flooded with light. Close the diaphragm two-thirds or even more. If the crystal fragments are not now clear and distinct with sharply defined contours lower the condenser a *trifle*, but only a trifle. It is of course possible that in selecting the liquid one of the same refractive index as that of the solid may have been chosen; this is, however, very unlikely.

[1] These directions refer specifically to the Chemical Microscope described on p. 19.

Contour bands appear whether the solid has either a higher or a lower index than the surrounding liquid. The next step must therefore be to ascertain whether it is higher or lower than the liquid employed. This is accomplished by *slowly raising* the microscope tube by means of the coarse adjustment, at the same time closely observing the *change in appearance, direction of motion* or *change in color* of the contour bands and halo-like band of light bounding the crystal fragments. When the solid possesses a higher index than that of the liquid, the contours are usually dark and well defined with a halo or band of light *within* the black bands; as the microscope tube is raised this band of light will appear to move *inward*, i.e., *toward the center* of the solid. If, on the other hand, the solid possesses a lower index of refraction, the black contours are relatively weak, with the bright halo outside the black bands, and upon raising the objective the band of light or bright halo appears to move *outward* or *away from* the center. This difference in behavior is due to the fact that when the fragment has a higher refractive index than the liquid it causes the rays leaving it to converge, but if the solid has a lower refractive index the emerging rays are divergent. In order to obtain the best results by this method, always screen the preparation upon the stage with the hand; thus none but transmitted light rays can enter the objective.

By employing oblique instead of axial light it becomes still easier [1] to determine whether the solid possesses a higher or a lower refractive index than the liquid in which it is immersed.

Before considering the method of procedure in this case let us study several simple yet instructive experiments.[2]

Place a small drop of mucilage or thin gum upon an object slide, beat it with a knife blade until full of air bubbles. Cover with a cover glass and place upon the stage of the microscope. Use an 8 millimeter objective and center a tiny air bubble whose image appears to be not over 1 to 2 millimeters in diameter. Focus sharply. The image obtained will consist of a tiny disk of light surrounded by a black ring. We are here dealing with a

[1] Schroeder van der Kolk, Zeit. anal. Chem., **38** (1899), 615.

[2] Gage, The Microscope (1908), p. 106, 10th ed., Ithaca, N. Y.

sphere of less refractive index (air $n = 1$) surrounded by a liquid of higher refractive index (gum solution or water $n = 1.3+$). Remove the condenser and slowly swing the mirror to one side, looking into the microscope at the same time. As the light becomes oblique the bright disk in the image of the air bubble moves in the *opposite* direction from the movement of the mirror. Move the mirror back and the reverse phenomenon will be observed. When the light is exactly axial the bright spot will be exactly at the center of the black circle. This constitutes one of the simplest and best tests for axial light that we possess. Now slowly raise the objective; the bright disk will be seen to grow larger and larger and the black ring will appear to move outward and the disk will become indistinguishable before the surrounding ring vanishes.

Take a drop of water and mix very thoroughly with it by gentle beating a tiny droplet of oil. There are thus obtained tiny spheres of oil of a refractive index higher (oil $n = 1.4+$) than that of the surrounding liquid (water $n = 1.33$). Again we obtain

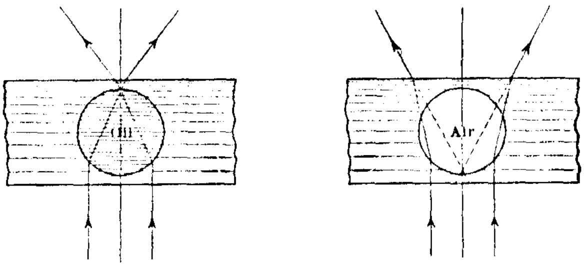

FIG. 106. Oil Globule and Air Bubble illuminated with Axial Light. (Gage.)

as the image of a tiny globule, a bright disk surrounded by a dark ring. With axial light this disk is concentric; with oblique light eccentric. As the mirror is swung aside the disk of light in the image appears to move in the *same* direction as the mirror. Upon raising the objective the disk of light grows smaller and smaller, the black annular contour band appears to move *inward* and the bright spot is the last to disappear. These phenomena are readily interpreted by referring to the diagrams, Figs. 106 and 107. With air, $n <$ liquid, the emerging rays are divergent;

with oil, $n >$ liquid, the emergent rays are converging. In Fig. 107 the solid line arrows indicate the direction of the moving mirror, while the dotted line arrows that of the corresponding direction of movement of the disk of light in the image. These

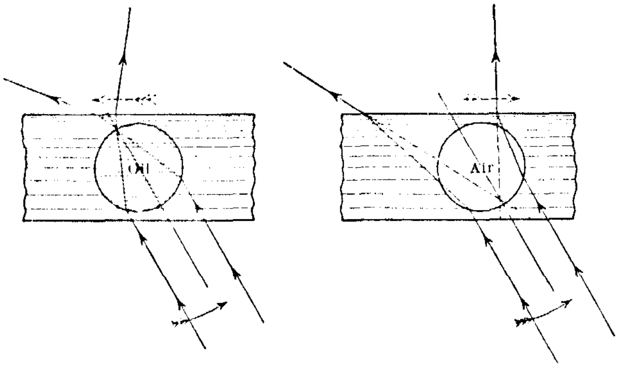

FIG. 107. Oil Globule and Air Bubble illuminated with Oblique Light. (Gage.)

diagrams indicate the behavior of the light rays, but in the image in the microscope positions and directions are reversed; hence the phenomena observed are those described above.

It thus appears that under oblique illumination the contour bands are heavier or darker on one side of the image of the object than on the other, the particular side which is darker depending upon the difference in the indices of object and mounting medium and the direction of the illuminating rays. Advantage is taken of these facts to determine by means of oblique light whether an object whose refractive index is sought has a higher or lower index than that of the test liquid in which it is immersed. Oblique light [1] is obtained by swinging the mirror to one side when no condenser is employed, or by sliding a piece of black paper or card just below the condenser or by holding a finger just below the condenser so as to cut off about one-half the lower aperture.

In the chemical microscope slide a piece of stiff black paper between the condenser and the ring attached to its lower part. The preparation on the stage will then be illuminated by oblique

[1] See Wright, Oblique Illumination in Petrographic Microscopic Work; Amer. J. Sci. (4) **35** (1913), 63.

light. The phenomena resulting can best be understood by consulting Figs. 108 and 109, in which the indicated directions of the passage of light rays have been greatly exaggerated. The crystal H has a higher refractive index than the liquid surround-

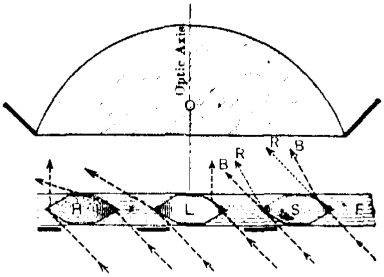

FIG. 108. Contour Bands in Half Shadow Illumination.

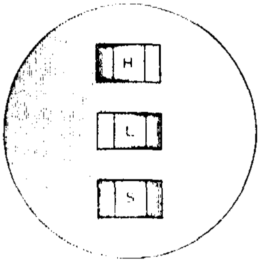

FIG. 109. Contour Bands in Half Shadow Illumination.

ing it; the rays passing through are therefore convergent, but only those at the left can enter the objective O; hence, the left side is bright and the right side dark. But in the case of the crystal L whose index is less than that of the liquid the emerging rays diverge, yet here again only part of the rays can enter the objective O; in this instance those on the right; thus the right side is bright: the left dark or in other words, the opposite of the phenomena observed with crystal H.

Conducting our observations with the condenser only very slightly lowered and the paper diaphragm inserted from the left until the dark shadow extends approximately to the center of the field, the phenomena seen will be as indicated in Fig. 109. The crystal H of higher index than the liquid appears *dark on the dark side* of the field and bright on the light side of the field; but the crystal fragment L of lower index than the liquid appears *bright on the dark side of the field* and dark on the bright side of the field. This is as it should be from Fig. 108, since in the image formed in the microscope the directions are reversed.

If we now lower the condenser a reversal of all the above phenomena takes place. It is therefore always wise to check the results recorded with condenser raised by lowering the con-

denser; moreover the phenomena are much more distinct with lowered condenser.

There is little chance for an error of judgment if the student will start with condenser raised and stopped down, and first slowly raise the objective, noting the direction of apparent movement of the contour bands or halo. Next test with oblique light and note the relative position of the dark contours with respect to the dark half of the field and finally lower the condenser and test again with oblique light. All three of the sets of observations should be in accord. The student should also learn to use a finger below the condenser to obtain oblique illumination and thus save time.

Since most of the liquids employed for the determination of refractive index by the immersion method have a greater dispersive power than the solids, at the end point in the immersion method the images usually appear surrounded by colored fringes. The conditions which usually obtain are that when the liquid and solid have the same refractive index for yellow-green rays, the liquid will have a higher n for blue rays than the solid but the solid will have a higher n for red rays than the liquid. It follows that the emerging red rays will be convergent as diagramed in S, Fig. 108, while the emerging blue rays will be divergent.[1] No dark contour bands will be sufficiently prominent to be noticeable, but the image will exhibit a bluish fringe on the outside and a reddish fringe on the inside, or with oblique light bluish on one side, reddish on the other. Raising the objective will cause the red fringe to move inward and the blue fringe outward. It is evident that this color dispersion phenomenon enables us to still further assure ourselves when we have found the liquid having the same n as that of the solid under examination.

When in the course of the experiments a marked color fringe is seen with the absence of black bands, the point has been reached in which liquid and solid have the same refractive index for light rays of medium wave length. To obtain more accurate results recourse must be had to monochromatic light.

In preparing a series of liquids of regularly differing refractive

[1] Wright, Amer. J. Sci., loc. cit.

indices for use in this immersion method, it is advantageous to select those having a *slightly* greater color dispersion than will be found in the solids to be tested. But highly dispersive liquids must be avoided since the color bands or halos are then so marked as to seriously interfere with the recognition of dark contours.

Having ascertained as described above whether the crystal fragment has a higher or a lower index than that of the liquid first tried, and thus in which direction to proceed, a second liquid whose index is probably very much nearer that of the solid is chosen. The first liquid is carefully removed by absorbing it with a bit of filter paper, a drop of the liquid next to be applied is added and allowed to flow completely around the crystal; after standing a few moments this is removed as before and a new portion added. The preparation is tested by raising the objective and by the half-shadow method to learn whether the solid or the liquid has the higher index. The process is repeated until the proper liquid has been found. In making the trials add first a liquid of a higher then one of lower value. When sufficient solid material is available it will be found that time will be saved and much more reliable data obtained if an entirely new preparation is made with each liquid. This also avoids wasting valuable liquids.

At the end of the chapter will be found tables [1] of liquids for use in the determination of refractive indices. In Table IV will be found the indices of isometric crystals useful in estimating the refractive indices of liquids.

If it is found that the index of no liquid in a series at hand corresponds to that of the crystal under observation, mixtures of two liquids may be made and the index of refraction of the mixture can roughly be estimated from the formula,[2]

$$n_1V_1 + n_2V_2 = n\,(V_1 + V_2),$$

in which V_1 and V_2 are the volumes of the two liquids, n_1 and n_2

[1] For exceptionally complete lists of media for refractive index determinations see Johannsen, Manual of Petrographic Methods.

[2] Schroeder van der Kolk, Mikroskopische Krystallbestimmung, Weisbaden, 1898, p. 13.

their respective indices of refraction and *n* the refractive index of the mixture. It is obvious that in the preparation in this manner, of liquids of intermediate index values, it is essential that the two liquids shall be miscible in all proportions, and that no new chemical compound shall result from the mixing. Since a determination of refractive index may often require a period of time sufficiently long to result in an appreciable loss of liquid through evaporation, the liquids chosen for mixing should, theoretically, not differ greatly in their boiling points, otherwise there is a possibility of the concentration of the less volatile liquid increasing. It will also be obvious that in order to obtain sufficiently exact calculated values from the equation given above, the liquids mixed should not have widely different densities. For these reasons approximate boiling points and densities have been given in Table I. This formula for calculating the index of refraction of a mixture of two liquids is based upon the assumption that to the final mixture each component contributes equally its own proportional part of the final index. There seems to be no sound theory in support of this assumption nor do the facts appear to be in accord with the formula. From experiments made in the Cornell laboratories, using an Abbe refractometer to determine the refractive index of the liquids before and after mixing, it was found that the calculated results were not always dependable to the second decimal place. The first decimal was always correct, the second usually so, but very rarely indeed would the third agree in calculated and found values. Mixtures allowed to stand several days and again measured gave similar results, showing that equilibrium had been reached when the first observations had been made.

Formulas of the kind given above should not be employed if the same degree of accuracy in calculation is wanted, as the immersion method will yield in practice.

The immersion method above described permits an accuracy in the determination of the refractive index within 0.005± but with monochromatic light and more refined methods of illumination an accuracy of 0.002± or even 0.001± may sometimes be reached.

The Refractive Index of Anisotropic Substances. — Crystals are either isotropic or anisotropic. In isotropic crystals light rays are refracted to an equal degree, no matter in what direction through the crystals the rays are sent, since the velocity of transmission of light is the same in all directions through the crystals, providing the crystals have not been subjected to stresses or strains. In the determination of the refractive indices of isotropic crystals, it is obvious that the same value will be obtained in all directions through the crystals. In the case of anisotropic crystals, however, the rate of transmission of light is different in different directions through the crystals. In order to better appreciate the influence of these properties upon the refractive index, it is necessary to briefly consider a few fundamental facts.

A ray of light, when passing obliquely from one medium into another whose rate of transmission for light rays is different, will be deflected from its original path according to the equation $\frac{\sin i}{\sin r} = \frac{V}{V'}$, in which i is the angle formed by the incident ray and the normal, r the angle formed by the refracted ray and the normal, and V and V′ the velocities of the transmission of the light in the two media. When the rays pass from a medium having a higher rate of transmission into one of lesser rate the deflection is toward the normal, but when passing from a medium with a lesser rate into one of higher rate the bending is away from the normal. In microscopic work the light rays are usually passing from air into a denser medium. If in the above equation we assign to the velocity of light in air the value of 1, the equation becomes $\frac{\sin i}{\sin r} = \frac{1}{V'}$, but $\frac{\sin i}{\sin r}$ is the expression for the index of refraction, from which it appears that the refractive index is inversely proportional to the velocity of the transmission of light in the medium. Since in anisotropic crystals, the rate of transmission of light rays differs according to the direction through the crystal in which the rays are sent, it is obvious that the refractive index of an anisotropic crystal cannot be expressed by a single value and further, that of the several values given by a

doubly refracting crystal, the greatest index will be found in the direction through the crystal of the lowest rate of light transmission and the smallest index in the direction of the highest rate of light transmission. In other words, different values for the index of refraction will be obtained according to the position in which the crystals lie upon the stage of the microscope.

Crystals belonging to the tetragonal and hexagonal systems (uniaxial crystals) possess two indices. Crystals belonging to the orthorhombic, monoclinic, and triclinic systems (biaxial crystals) have three indices.

In uniaxial crystals one value corresponds to that given by the ordinary ray and the other to that given by the extraordinary ray. The first value is found in that direction through the crystal where the light vibrations are transmitted transverse to the vertical crystallographic (and in this case optical) axis and is designated by the Greek letter ω; the second value is observed when light is transmitted through the crystal parallel to the vertical axis. This index is designated by the Greek letter ϵ. The double refraction of uniaxial crystals is said to be *strong* when ω is greater than ϵ, and *weak* when the reverse is found. When the refractive index ω is greater than ϵ, the crystal is said to be optically *negative* and when less than ϵ, optically *positive*. Some crystallographers prefer to designate the two refractive indices by the letters α and γ. In this case $\gamma - \alpha$ expresses the strength of double refraction and when α is greater than γ the crystal is optically negative.[1]

In biaxial crystals three different values for the rate of light transmission can be found, or in other words biaxial crystals have three axes of elasticity or directions of vibration; the axis of maximum rate of vibration transmission is commonly designated by the German letter $\mathfrak{a}$; that of the minimum vibration by $\mathfrak{c}$ and the intermediate axis by $\mathfrak{b}$. Since there are three axes of elasticity, three different values for the index of refraction may be obtained, the smallest value α in the direction of the maximum

[1] In order to be sure of the values for ω and ϵ, a number of different crystals should be tried out. ω will be constant in all of them, ϵ will differ slightly according to the position of the crystals.

axis $\mathfrak{a}$, the greatest value γ in the direction of the axis $\mathfrak{c}$ and an intermediate value β in the direction of the $\mathfrak{b}$ axis. The double refraction of the crystal will be strong or weak according to how much greater γ is than α. To determine whether a biaxial crystal is optically positive or negative requires other data than refractive indices.

In uniaxial crystals the determination of which index is ω and which ϵ is comparatively simple since ϵ coincides with the crystallographic c axis; but in the case of biaxial crystals it is seldom that a chemist possesses either the knowledge or a microscope sufficiently well equipped to definitely locate the different axes of elasticity, since their directions are indicated by neither the crystallographic nor the optical axes. For this reason it is wiser for the chemist-analyst to follow the methods of Kley,[1] Bolland [2] and others, and record values as obtained in the method given below.

Swing the polarizer in place, having first removed all condensing lenses. Place upon the stage an object slide carrying the crystals or crystal fragments to be examined immersed in a liquid of known refractive index and covered with a tiny thin cover glass. Place the analyzer over the eyepiece (or slide it into the tube if an instrument of this type is used) and set the graduated circles of both prisms at zero so that their planes of vibration are crossed. Turn the stage of the microscope until the crystal selected for observation extinguishes; remove the analyzer. Ascertain by raising the objective whether the index of the crystal is greater or less than the liquid; check results by oblique light by placing the finger part way across the opening of the polarizer. Substitute one liquid after another until the refractive index of the crystal is ascertained, being very careful not to alter the position of the crystal. If the crystal is moved replace the analyzer and readjust the crystal to the position of extinction. Read the position of the crystal as indicated on the circumference of the stage and rotate the stage so as to turn the crystal exactly 90 degrees to its position of extinction and proceed

[1] Kley, Zeit. anal. Chem., **43** (1904), 160.
[2] Bolland, Monats., **29** (1908), 991; **31** (1910), 387.

with the determination of the refractive index just as before. The two values obtained will, in the case of uniaxial crystals, be the indices ϵ and ω. When dealing with biaxial crystals in order to use the values in Bolland's tables first set the crystal so that its prism edge lies parallel to a plane passing through the short diagonal of the polarizing nicol. Next determine the index for a position at 90 degrees to the first. If a third value can be found, determine it. If the values for α and γ are wanted, determine the values for a very large number of fragments; the minimum value will be α and the maximum γ.

Determination of the Refractive Index of a Liquid by the Method of the Displacement of Images. — When an object is viewed through a liquid from a point in a line normal to the plane in which the object lies, the image observed will appear to lie in a plane *above* that of the object, the amount of displacement being dependent upon the refractive index of the interposed medium.[1]

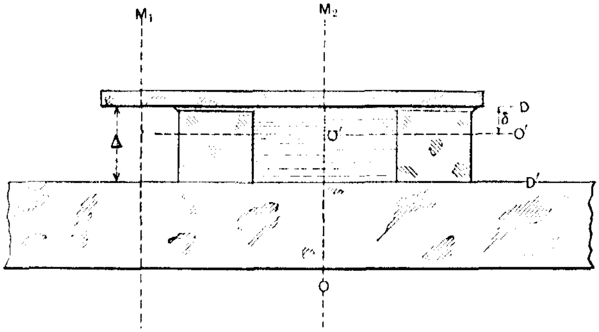

FIG. 110.

If, therefore, we place a liquid in a cell of depth DD′ (Fig. 110) and measure the amount of displacement of image OO′ of a mark at O upon the lower surface of the glass slide, the index of refraction n will be found from the equation $n = \frac{DD'}{DO'}$.

[1] This method is very old and is generally known as the Duc de Chaulnes Method, having been described by him in 1767–1770.

See also Sorby, Chem. N., **37** (1878), 151; Watson, Physics; Johannsen, Manual of Petrographic Methods.

Method. — Cement upon a thin object slide of clear glass, a ring, whose top and bottom are ground true and parallel. The cell thus formed should be approximately one millimeter deep and several millimeters in diameter. Place in the cell the liquid whose refractive index is sought and cover with a thin cover glass of greater diameter than that of the cell, as shown in Fig. 110.

Determine the thickness of the liquid layer by means of the graduations on the fine adjustment as follows: focus carefully upon the *upper* surface of the object slide. Read the position of the fine adjustment. Slide the cell along until the projecting cover glass is in the field and focus upon the *under side* of the cover glass and record this value. This will give the depth of the liquid plus an error due to the refraction of the cover glass. Next focus upon the upper surface of the cover glass. The difference between the last two readings will give the apparent thickness a of the cover. The true thickness x of the cover can now be found from the equation $1.52 = \frac{x}{a}$ where 1.52 is the refractive index of glass, and $x - a$ will be the value to be subtracted from the thickness of the liquid layer found above in order to obtain the true thickness. Call this corrected thickness Δ.

Now push the preparation along so that only the object slide appears in the field. Focus sharply upon the upper surface. Without disturbing the adjustment push the slide to one side so that it is no longer in the field and by means of the Abbe condenser project the image of a net ruled scale into the plane of the upper surface of the object slide. (See page 156.) This is done by adjusting the Abbe condenser until the scale is very sharp and clear in the microscope. Under no circumstances must the focus of the microscope be changed. Push the slide into the field so that an observation may be made outside the cell but through both slide and cover glass, that is in the line M_1. The image of the net rulings will be faint and hazy. Read the fine adjustment and focus *up* by means of it until the rulings become as sharp and clear as in the first place. There is thus obtained the amount of the displacement of image due to slide and cover glass. Without changing the focus, move the preparation until

an observation may be made through the filled cell, i.e., in the vertical line M_2. The image of the net will now either be invisible or badly out of focus; having recorded the reading on the fine adjustment, again focus *up* until the image of the net becomes sharp and clear; read the fine adjustment. This value is the amount of displacement due to slide, cover glass *and* cell contents. The difference between the first reading obtained and the second gives the amount of displacement OO′ of the image O due to the liquid in the cell; subtract this last value from the depth of the cell Δ; the remainder δ equals O′D. The refractive index of the liquid is therefore $n = \frac{\Delta}{\delta}$.

Providing great care is exercised in the micrometric measurements the determination of the displacement of image due to the object slide and cover glass may be eliminated as follows: Project the image of the grating into the focal plane with no slide in the field, move the slide until an observation can be made through both slide and cover glass (vertical line M_1), set the micrometer of the fine adjustment at zero and focus the plane of the net by means of the *screw adjustment of the substage condenser;* the displacement of the image due to slide and cover glass has thus been eliminated. Without further changing the focus of the optical systems either above or below the stage, move the cell containing the liquid so that an observation can be made through the center of the cell (vertical plane M_2). Focus up with the fine adjustment; the reading of the scale will give the displacement O′O, $\therefore \delta = \Delta - O'O$ and $n = \frac{\Delta}{\delta}$.

In all cases where measurements are made by means of the fine adjustment, first turn the graduated head until the pillar of the instrument is raised sufficiently to allow for a liberal movement up and down in focusing. A number of readings should always be taken of the position of the focal planes and the results averaged, never forgetting to lower the objective slightly below the position of the sharpest focus and then raise it until the image appears most sharply defined, thus avoiding the error due to "back-lash."

It is obvious that the cell must be accurately ground in order that the cover glass shall lie parallel to the object slide, or if not truly parallel, that the measurement of the depth of the cell and that of the displacement of the image be made at the same point. Since there is always a thin film of liquid between the cover glass and top of the cell, the value for Δ should be determined with the cell filled and all data necessary for the computation be made at once.

This method gives values to three decimals for n of which two places at least will be correct and the third not far from the true value.

Correct results are more easily obtained with red or yellow light than by ordinary daylight.

In the absence of a suitable cell, a simple container for the liquid may be made from narrow strips of glass cut from an ordinary thin object slide and laid as shown in Fig. 111. These strips of glass are easily cut with a glazier's diamond or with the sharp end of a file.

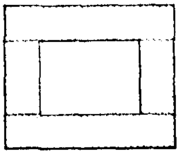

FIG. 111.

The liquid to be studied is allowed to drop into the opening between the glass strips, and the cell upon being covered remains filled by capillarity. The cover is gently pressed down and the excess of liquid removed with absorbent paper or a piece of drawn out glass tubing. Since there is a film of liquid in this case between both the upper and lower surfaces of the cell walls, considerable care must be exercised to avoid serious error. In any event the results are to be regarded as approximations only.

A number of other more accurate methods for the microscopic determination of the refractive indices of liquids have been proposed, but these require specially constructed prisms, wedges or lenses, or fragments of glass of known index of refraction. For information as to methods, apparatus and accuracy the student is referred to the excellent paper by F. E. Wright, The Measurement of the Refractive Index of a Drop of Liquid, *Journal Washington Academy Sciences* **4**, (1914), 269.

Determining Thickness by Displacement of Image. — It is obvious from the above discussion that if we have a transparent body whose refractive index we know, we can determine its thickness by applying similar methods. Supposing in the diagram, Fig. 110, we are dealing with a solid body. Its thickness will be $T = n\ O'D$. In this case the value of n is known, and O'D can quickly be ascertained experimentally. The value for T thus found will be accurate within approximately 0.02 mm.

In the absence of a cover glass gauge, the thickness of cover glasses or of object slides may be thus determined: place a tiny, very thin drop of ink upon the upper and upon the lower sides of the glass plate, so that they fall almost in the same line; focus first upon the lower surface of the glass, using the ink spot as a guide, read the fine adjustment and *focus up* until the upper surface of the slide is in focus, again read the fine adjustment; the difference between the two readings gives the displacement of image. Taking for the value of n for cover glasses and ordinary object slides 1.52, the thickness is readily calculated from the formula given above.

Glass varies according to its composition from $n = 1.52$ to $n = 1.59$. For quartz, $n = 1.544$ to 1.553.

TABLE I.

LIQUIDS FOR THE DETERMINATION OF THE REFRACTIVE INDICES OF SOLIDS BY IMMERSION METHOD.

Index of refraction.[1]	Name.	Approximate boiling point. °C.	Approximate density.	
1.32	Methyl alcohol	66	0.79	
1.36	Ethyl ether	35	0.71	
1.37	Ethyl alcohol	78	0.79	$n = 1.36$[2]
1.39	Heptane	98	0.73	
1.40	Amyl alcohol	132	0.83	
1.44	Chloroform	61	1.48	
1.46	Carbon tetrachloride	76	1.59	
1.46	Cajeput oil	174	0.92	
1.47	Glycerine	290	1.61	
1.47	Turpentine	155	0.86	
1.47	Olive oil	....	0.91	
1.48	Castor oil	....	0.96	$n = 1.49$[2]
1.49	Xylene	136	0.86	
1.49	Benzene	80	0.88	$n = 1.50$[2]
1.50	Clove oil	....	1.05	
1.51	Cedar wood oil	....	0.98	
1.52	Monochlorbenzene	132	1.04	$n = 1.54$[3]
1.55	Nitrobenzene	209	1.20	
1.56	Monobrombenzene	155	1.49	
1.57	Orthotoluidine	197	1.00	
1.58	Monobromphenol	195	....	
1.58	Bromoform	149	2.83	$n = 1.59$[3]
1.61	Quinaldin	240	1.05	
1.62	Monoiodobenzene	187	1.83	
1.62	Quinoline	239	1.09	
1.625	Carbon bisulphide	46	1.29	
1.63	Alpha-monochlornaphthalene	255	1.50	$n = 1.64$[3]
1.65	Alpha-monobromnaphthalene	277	1.50	
1.76[2]	Methylene iodide	180	3.34	
1.95[3](?)	Phenyl sulphide	272	1.12	$n = 1.8+$

[1] The values for n in this column are those obtained in the author's laboratory at 20°-22° C. by means of the refractometer on Merck products.

[2] Schroeder van der Kolk, l. c.

[3] Kley, l. c.

Table II.

LIQUIDS FOR DETERMINATION OF REFRACTIVE INDICES OF MINERALS, CRYSTALS, ETC.

Wright's Series.

Bul. 158, Carnegie Institute.

For indices		Use mixtures of
from	to	
1.450	1.475	Petroleum and turpentine.
1.480	1.535	Turpentine and ethylene bromide or turpentine and clove oil.
1.540	1.635	Clove oil and alpha-monobromnaphthalene.
1.640	1.655	Alpha-monobromnaphthalene and alpha-monochlornaphthalene.
1.66	1.740	Alpha-monobromnaphthalene and methylene iodide.
1.740	1.790	Sulphur dissolved in methylene iodide.
1.790	1.960	Methylene iodide, antimony iodide, arsenic sulphide, antimony sulphide, sulphur.

This series requires the use of but few liquids and keeps the dispersion of the liquids within narrow limits throughout the series. As prepared for use, each one of the series should differ from the next above or below by 0.005. The value of *n* in each mixture made must first be determined by means of a refractometer.

Table III.

MEDIA FOR REFRACTIVE INDEX DETERMINATIONS.[1]

Weighing out and grinding together in a mortar the weights of the substances given in the table, a series of eutectics is obtained, each of which will have the refractive index indicated in the first column. Checking with a refractometer is unnecessary.

Refractive index.	Components in grams.					
1.487	Thymol....	35	Camphor..	65		
1.505	Thymol.....	67	" ...	33		
1.535	Salol.......	60	" ...	40		
1.54	"	60	" ...	40	Alpha-naphthylamine	5
1.55	"	60	" ...	40	"	14
1.56	"	60	" ...	40	"	24
1.57	"	60	" ...	40	"	34
1.58	"	60	" ...	40	"	44
1.59	"	60	" ...	40	"	60
1.60	"	60	" ...	40	"	82
1.605	"	60	" ...	40	"	100

[1] Merwin, J. Wash. Acad. Sci., 3 (1913), 35.

TABLE IV.

COMPOUNDS BELONGING TO THE ISOMETRIC SYSTEM WHOSE CRYSTALS MAY BE USED FOR THE DETERMINATION OF THE REFRACTIVE INDICES OF LIQUIDS.

Refractive index.[1]	Name.	Formula.
1.430	Sodium alum	$Na_2SO_4 \cdot Al_2(SO_4)_3 \cdot 24\ H_2O$
1.450	Potassium alum	$K_2SO_4 \cdot Al_2(SO_4)_3 \cdot 24\ H_2O$
1.459	Ammonium alum	$(NH_4)_2SO_4 \cdot Al_2(SO_4)_3 \cdot 24\ H_2O$
1.481	Potassium chromium alum	$K_2SO_4 \cdot Cr_2(SO_4)_3 \cdot 24\ H_2O$
1.485	Ammonium iron alum	$(NH_4)_2SO_4 \cdot Fe_2(SO_4)_3 \cdot 24\ H_2O$
1.490	Potassium chloride	KCl
1.494	Rubidium chloride	$RbCl$
1.515	Sodium chlorate	$NaClO_3$
1.544	Sodium chloride	$NaCl$
1.553	Rubidium bromide	$RbBr$
1.559	Potassium bromide	KBr
1.566	Strontium nitrate	$Sr(NO_3)_2$
1.571	Barium nitrate	$Ba(NO_3)_2$
1.640	Ammonium chloride	NH_4Cl
1.645	Cesium chloride	$CsCl$
1.650	Rubidium iodide	RbI
1.657	Potassium chlorostannate	K_2SnCl_6
1.667	*Potassium iodide*	*KI*
1.698	Cesium bromide	$CsBr$ { n lies between 1.69 and 1.71
1.700	Ammonium iodide	NH_4I
1.755	Arsenic trioxide	As_2O_3
1.788	Cesium iodide	CsI { Bolland gives CsI $n = 1.95$
1.95+	Lead nitrate	$Pb(NO_3)_2$ Groth gives 1.782
2.071	Silver chloride	$AgCl$

[1] Most of these values for n are taken from Groth's tables. Chemische Krystallographie, Leipzig, 1906–10.

TABLE V.

REFRACTIVE INDICES AND CHARACTER OF DOUBLE REFRACTION OF TYPICAL CRYSTALS.

Name.	Formula.	Crystal system	Refractive index,[1] n_D. α or ω.	β or ϵ.	γ.	Double refraction.
Ammonium nickel sulphate	$(NH_4)_2Ni(SO_4)_2 \cdot 6H_2O$	M	1.489	1.498	1.508	+
Ammonium oxalate	$(NH_4)_2C_2O_4 \cdot H_2O$	O	1.438	1.547	1.595	−
Ammonium persulphate	$(NH_4)_2S_2O_8$	M	1.498	1.502	1.587	+
Barium chloride	$BaCl_2 \cdot 2H_2O$	M	1.635	1.646	1.660	+
Copper sulphate	$CuSO_4 \cdot 5H_2O$	Tr	1.514	1.536	1.543	+
Magnesium sulphate	$MgSO_4 \cdot 7H_2O$	O	1.432	1.455	1.461	−
Mercuric chloride	$HgCl_2$	O	1.74	1.71	1.72	−
Mercuric cyanide	$Hg(CN)_2$	T	1.65	1.60	....	−
Potassium antimonyl tartrate	$K(SbO)C_4H_4O_6 \cdot H_2O$	O	1.619	1.636	1.637	−
Potassium arsenate	H_2KAsO_4	T	1.57	1.52	....	−
Potassium bichromate	$K_2Cr_2O_7$	Tr	1.72	1.74	1.82	+
Potassium nickel sulphate	$K_2Ni(SO_4)_2 \cdot 6H_2O$	M	1.484	1.492	1.505	+
Potassium nitrate	KNO_3	O	1.335	1.505	1.506	−
Potassium persulphate	$K_2S_2O_8$	Tr	1.461	1.467	1.566	+
Potassium sulphate	K_2SO_4	O	1.493	1.494	1.498	+
Silver nitrate	$AgNO_3$	O	1.729	....	1.788	+
Sodium borate (tetra)	$Na_2B_4O_7 \cdot 10H_2O$	M	1.446	1.469	1.472	−
Sodium nitrate	$NaNO_3$	H	1.58	1.33	....	−
Sodium phosphate (tertiary)	$Na_3PO_4 \cdot 12H_2O$	H	1.44	1.45	....	+
Sodium phosphate (secondary)	$HNa_2PO_4 \cdot 12H_2O$	M	1.432	1.436	1.437	−
Sodium thiosulphate	$Na_2S_2O_3 \cdot 5H_2O$	M	1.488	1.508	1.536	+
Strontium antimonyl tartrate	$Sr(SbO)_2(C_4H_4O_6)_2$	H	1.638	1.587	....	−
Sucrose	$C_{12}H_{22}O_{11}$	M	1.538	1.566	1.571	−
Tartaric acid	$H_2C_4H_4O_6$	M	1.583	1.566	1.571	+
Urea	$CO(NH_2)_2$	T	1.485	1.61	....	+
Zinc sulphate	$ZnSO_4 \cdot 7H_2O$	O	1.46	1.48	1.49	−

[1] Values for n have been taken from Groth's tables and checked in the laboratory. For uniaxial crystals the first column is ω and the second ϵ. For biaxial crystals the first column is α, the second β and the third γ.

REFERENCES.

Tables of refractive indices in the following articles will be found by the analyst of great value in the identification of compounds by means of the immersion method.

Schroeder van der Kolk — Tabellen zur mikroskopischen Bestimmung der Mineralien nach ihren Brechnungsindex, Zeit. anal. Chem., **38** (1899), 615.

Kley — Ein Beitrag zur Analyse der Alkaloide, Zeit. anal. Chem., **43** (1904), 160.

Bolland — Die Brechnungs indices der weinsauren Alkaloide nach Einbettungsmethode. Monats., **29** (1908), 991. Die Brechnungsindices krystallinischer-chemischer Individuen nach der Einbettungsmethode von Standpunkte der analytischen Praxis. Monats., **31** (1910), 387.

CHAPTER X.

QUANTITATIVE ANALYSIS BY MEANS OF THE MICROSCOPE.

Some of the most difficult problems with which the chemist has to deal are those requiring an opinion as to the probable percentage composition or amount of adulteration in materials which cannot be chemically analyzed. As typical examples of these cases may be cited, mixtures of starches, meals, adulterated flours, spices, teas and other food products; mixtures in which "firsts" have been sophisticated with an inferior quality of the same material; adulterated pigments; mixtures of wood pulps, paper pulps, textile fibers, etc.

In the solution of problems of the above type there are several possible methods of procedure, but only two need occupy our attention. That these methods may be sufficiently accurate for our purpose the following requirements must be met. The components of the mixture must differ sufficiently in their appearance under the microscope to permit their easy recognition, or they must be readily differentiated by their different behaviors towards stains or reagents; the components must not differ materially one from the other in specific gravity and must be small enough in size to allow mounting on an object slide and covering with an object glass; if of different specific gravities, their specific gravities must be known.

We may (1) compare preparations made from the mixture of unknown percentage composition with preparations made from similar mixtures of known percentage composition which have been carefully prepared in the laboratory; or (2) we may by micrometric measurements ascertain the volume of the component whose percentage in the mixture is sought and from its known density compute its weight and hence its per cent in the mixture; or (3) in the case of solids made by fusion where the melt on freezing has been found to give rise to phases sufficiently

characteristic in appearance yet differing according to the percentage composition, the recognition of these crystalline phases will serve to indicate the probable composition of the mass.

The last method (3) is restricted to materials such as alloys or related substances. An expert, knowing the characteristic appearance following certain treatments, is able, on studying materials of known components but of unknown percentage, to decide upon the probable proportion of the chief constituents without the necessity of a quantitative analysis. This type of analysis by means of the microscope can be practiced only by experts after long study and investigation and cannot therefore be here discussed.

The first method may be employed in the quantitative analysis of all mixtures consisting of individual particles, fragments or crystals, which are not too large for microscopic examination, providing the component particles differ sufficiently in appearance to permit of identification and that mixtures of known percentage composition can be prepared in the laboratory. Since this method has its chief application in estimating the amount of adulteration in a substance, the discussion will be confined to this aspect only.

Method I. — Prepare three standard mixtures containing the same components as the commercial products to be examined. In preparing these standards the adulterant must be carefully weighed out and added to a definite weight of the pure product; after *thorough* mixing, three mixtures of known per cent of adulteration are thus obtained.

From each one of these standards in turn, several like portions are taken, placed upon glass object slides in a drop or two of suitable medium (usually glycerine and water 1 : 1),[1] distributed uniformly in the mounting medium and covered with a square cover glass, care being taken to avoid air bubbles; use just sufficient mounting medium to ensure an even distribution of the material throughout the whole area covered by the cover glass

[1] Smith, Health Mag., **5** (1898), 286, has shown that in the case of starch mixtures a mounting medium of equal parts of glycerine, water and 50 per cent acetic acid is preferable.

and to completely fill the space below the confining cover yet not have a loss by the squeezing out of the liquid. One of the preparations is then placed upon the stage of the microscope, and a count is made of the number of particles of the adulterant which are found in a field of the microscope. Having counted the foreign particles in several different fields, a second preparation from the same mixture is tried and so on until at least twenty or more

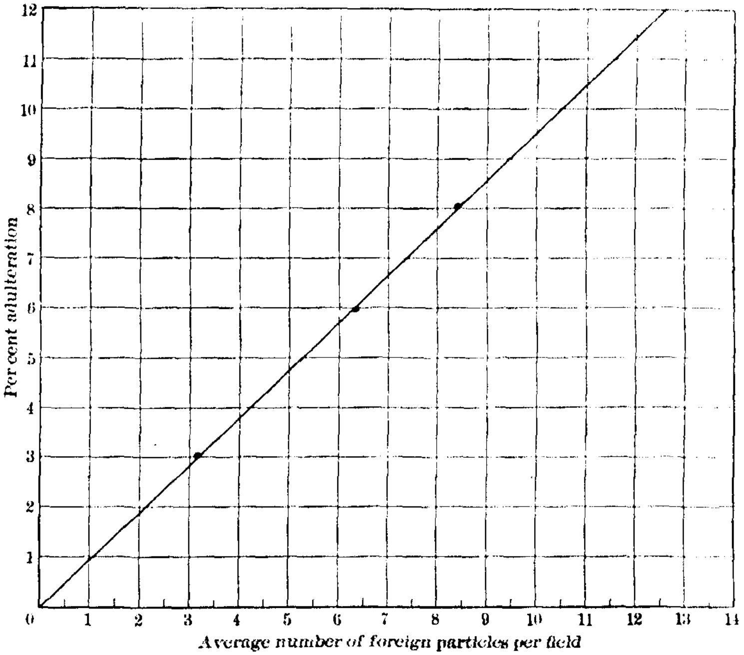

FIG. 112.

counts have been made. A different mixture is then taken and the number of foreign particles determined exactly as in the first. Finally, the third known mixture is examined and counts made as before. Upon a sheet of "coördinate" paper lay out per cents of adulteration as ordinates and numbers of foreign particles as abscissas. The averages of the counts of these particles obtained in each of the three mixtures of known per cent adulteration are then marked upon the coördinate paper in their

proper places, and a line is drawn through the zero and the three points; the "plot" obtained will be substantially a straight line if the work has been properly done. If the points laid out show a marked deviation from a straight line the components differ materially in their densities, or an error has been made. There is thus obtained a device, Fig. 112, by which we can determine, from a count of the foreign particles in any similar mixture, the per cent of this foreign matter present in material of unknown percentage composition.[1]

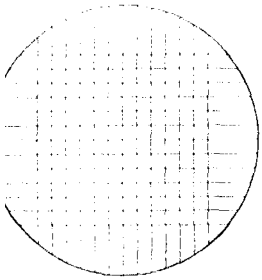

FIG. 113.

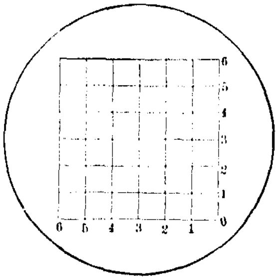

FIG. 114.

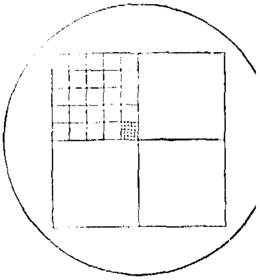

FIG. 115.

Net Ruled Eyepiece Micrometers.

To facilitate counting an eyepiece with net micrometer is essential. Rulings are usually of two types, as shown in Figs. 113 and 114. Where type 113 is employed the entire field of view may be counted but in type 114 it is better to call a "field" that area comprised within the ruled square. This system is preferable to that of employing a cell with ruled bottom referred to below. An attachable mechanical stage will be found to be a great help in avoiding the making of counts in the same area more than once.

Although the method just described appears at first sight to be crude and unreliable it has been found after a number of years' trial in the hands of a large number of students to yield excellent results.

In the case of starch mixtures, where the foreign component

[1] Chamot, Seventh International Congress Applied Chemistry, Section VIIIc (1909), 249.

is present in the proportion of 3 to 7 per cent the results found are very close to the actual per cent, but when 7 per cent is reached, the beginner has trouble in obtaining reliable counts, and above 10 per cent the method requires great manipulative skill.

It must, however, be borne in mind that a method of this sort even at its best gives merely a close approximation to the true value.

The chief difficulties which will be encountered are those of removing equal amounts in every case upon the end of a tiny spatula; of obtaining a uniform distribution of the material throughout the drop; and of lowering the cover glass upon the preparations without destroying the uniformity of distribution of particles or introducing air bubbles. A little practice, however, will enable the analyst to work rapidly and accurately.

If more nearly accurate sampling is desirable, a portion of the material is carefully weighed out, spread on a piece of glass or glazed paper in a thin square of as nearly uniform thickness as possible and then sampled by "quartering" in the usual manner[1] until a section equivalent to 2 to 4 milligrams is obtained for transfer to the object slide.

An even better method consists in carefully weighing out a small portion of the material to be examined and mixing it with a known weight, several times greater, of a finely and uniformly powdered substance very soluble in water (or other solvent). After thorough mixing, a small portion of the preparation is removed, accurately weighed and transferred to an object slide. The selected mounting liquid is added, causing the soluble diluting solid to dissolve and disappear, leaving a known weight of the insoluble material under investigation evenly spread upon the slide. The number of foreign particles in this tiny portion can then be counted. In the case of most food products, such as starches, flour, meals, spices, etc., powdered sucrose, dextrose, lactose or soluble dextrine are most useful as diluents.

When the mixtures under examination are of a density only very slightly greater than water and are insoluble therein, and

[1] Kraemer, J. Am. Chem. Soc., **21** (1899), 659.

therefore if suspended would subside only after a long period, it is possible to weigh out a portion of the mixture, add it to water, or better, water and glycerine, in a small graduated flask, fill to the mark, shake well and quickly remove one cubic centimeter or less, for counting. This method precludes an error arising from non-uniform quantities but is longer and more cumbersome than the methods already described.

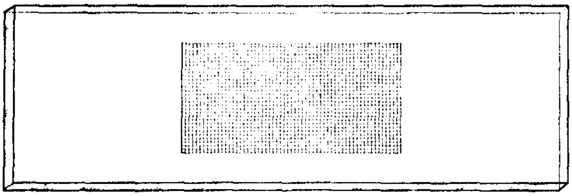

FIG. 116. Object Slide Ruled in One-half Millimeter Squares.

Instead of using a net ruled micrometer eyepiece some microscopists employ a slide ruled in squares or a tiny cell with ruled bottom, as shown in Figs. 116 and 117.[1] The advantage of such devices of permitting the use of any eyepiece is usually outweighed by a number of undesirable features, chief among which may be mentioned the objections that the rulings on the slides are

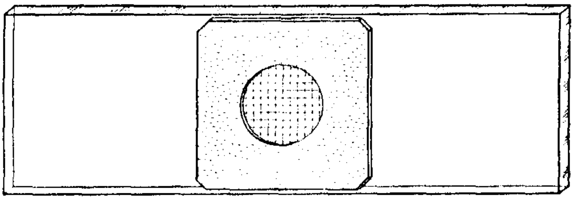

FIG. 117. Girard Counting Cell for the Analysis of Flour.

not always clear when the particles to be counted are in focus; the relatively large size of the ruled squares with a high power; and the difficulty of properly cleaning the slides without eventually injuring the rulings.

When it is desirable to cover a definite area .on the object slide it is far better to employ a micrometer disk-diaphragm

[1] Made by Nachet et Fils, Paris, France.

properly calibrated and inserted into the eyepiece or to cut a square opening in a disk of dull black paper, thin card, metal or blackened mica, and drop the disk into the proper eyepiece by removing the eye-lens and allowing the disk to rest upon the diaphragm of the eyepiece. The proper size of opening is ascertained by eyepiece and stage micrometers, and a square hole of this calculated size is cut in the paper and the perforated disk is inserted in the eyepiece. The final adjustment is then made with the draw-tube.

When the particles of material are of a sufficiently low density to remain suspended for a few seconds and one cubic centimeter portions can be removed the Sedgwick-Rafter counting cell used

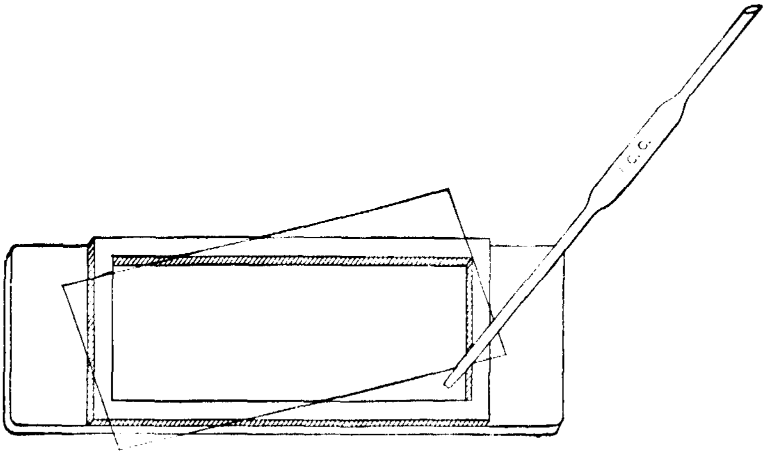

FIG. 118. Counting Cell. (After Whipple.)[1]

in the quantitative determination of the microscopic organisms in water may be profitably employed. This cell, Fig. 118, consists of a glass object slide of standard size to which is cemented a brass cell 5 centimeters long by 2 centimeters wide; its area is therefore 1000 square millimeters and being made exactly 1 millimeter deep, its capacity when closed with a cover glass is 1 cubic centimeter. Counts of particles are made in as large a number of fields as possible, using a net eyepiece micrometer

[1] From The Microscopy of Drinking Water, by G. C. Whipple, p. 35, Third Ed. John Wiley and Sons, Inc. Reproduced here through the courtesy of the author.

or an eyepiece with a central diaphragm opening adjusted to any convenient area on the slide. Results may be expressed either in numbers per cubic centimeter or in per cent by the plotting method described above.[1]

In the biological examination of water the microscopic organisms are concentrated into a few cubic centimeters of water by a small sand filter contained in the stem of a funnel of special design. The sand, together with the supernatant small volume of water, is emptied into a test tube, given a rotary motion and as soon as the heavy sand subsides, the water containing the organisms in suspension is poured off and one cubic centimeter transferred to the counting cell.[2] Although used primarily for the purpose stated, this counting cell and method can be applied to many problems involving chemical analyses.

In order to facilitate the counting and recording of the suspended matter found in water, Whipple has devised an eyepiece micrometer with special ruling. This type of micrometer has been found desirable as an aid in recording the size and number of masses of amorphous matter in water. By common consent American analysts have agreed to express these values in terms of the areas covered by the masses found in the cell. The unit employed is a square, 20 microns on a side, and therefore equal to 400 square microns; this is known as a "standard unit." The eyepiece micrometer is ruled and so adjusted that with a given objective and eyepiece the smallest squares are equal to a standard unit, Fig. 115.

Method II. — When isolated particles of sufficiently definite shape can be found and are of known composition and density, it is possible to calculate their weight from micrometric measurements.

[1] For further applications of Method I, see Meyer, Zeit. Nahr. u. Genuss, **17** (1909) 497: Ezendam, Zeit. Nahr. u. Genuss., **18** (1909) 462. Analysis of Starch Mixtures.

Young, Bull. 110, Bureau Chem., U. S. Dept. Agric.; Pollen in Honey.

Boedemann, Landw. Vers. Sta., **75**, 134; Smut Spores in Flour, etc.

Oerum, Biochem. Zeit., **35** (1912), 18; Fat in Milk: Vauflart, Ann. Falsif., **4** (1911) 381; Analysis of Meals.

[2] For details and precautions in water examination, the student should consult Whipple, The Microscopy of Drinking Water. New York, Wiley & Sons, Inc.

This method is especially useful in estimating the weight of substances imbedded in other materials in such a way as to be not easily separated; in the determination of poisons in forensic investigations; and in determining the weight of tiny metallic beads or pieces of metal, which, for one reason or another, cannot be weighed on a balance.

The dimensions of the particles are first determined by any one of the micrometric methods described in Chapter VII. From these measurements the volumes of the particles are calculated and their weight then obtained by multiplying by the specific gravity of the substance.

If the substance whose weight is to be determined can be made to take the form of a sphere the data found are usually as accurate as those obtained by weighing, but it is obvious that if only more or less irregular particles or crystals are available the method should be regarded as giving merely approximate results. Even so, the method must be recognized as of value since in many instances no other system of solving the problem of percentage composition may be available.

This method of quantitative analysis by means of the microscope is very old and has been successfully applied to the determination of gold and silver in fire assays (especially with the blowpipe) where the metallic beads obtained on cupellation are too small to weigh even upon a sensitive assay balance. With carefully fused beads it has been shown[1] that the results are accurate and quickly obtained.

The first essential is that the little metallic globule shall be a perfect sphere. If it is not, it is placed in a tiny cavity in a piece of charcoal and fused before the blowpipe; after cooling, it is transferred to a drop of glycerine and water (1 : 1) on a glass object slide by picking it up with a drawn-out glass rod slightly moistened. Bring the metallic sphere under the center of the micrometer eyepiece, use an objective of low power, illuminate with axial light, with the Abbe condenser well lowered using a small diaphragm opening. Focus up slowly and as soon as the image reaches its maximum diameter record the scale

[1] Goldschmidt, Zeit. anal. Chem., **16** (1877), 434.

reading. Make several observations of the diameter of the sphere. Then illuminate the sphere by oblique light by swinging the mirror far to one side; determine the diameter again, making not less than three observations; the results should be the same as the measurements made with axial light. Average the results. The weight of the bead may now be calculated from the equation $W = (d^3 \times 0.5236)\ s$ where d is the diameter of the sphere and s the specific gravity of the metal.[1]

For the quantitative determination of minute particles of mercury micrometric measurements of the diameters of the globules of the metal and calculations of weight therefrom are also unquestionably one of the oldest and best methods at our disposal in toxicological examinations, in the analysis of mineral waters, urine, gases carrying mercury vapors, etc.

Raaschou[2] has recently worked out in great detail the methods and conditions essential for the quantitative separation of minute amounts of mercury from liquids. For details, the student should consult the original article.[3] When dealing with sublimates of metallic mercury consisting of so great a number of tiny globules as to render measurements of the diameters of all the globules impracticable, cause them to unite into a few large spheres by stirring the film with a fine needle, or stiff hair, or glass rod drawn down to a hair, but if this is done the needle or hair must always be examined with the microscope to see that no mercury has been removed by clinging to the stirrer. In order that accurate measurements may be made it is essential that the globules of metallic mercury shall never be so large that they become flattened and thus not perfect spheres. In determining the diameter of the spheres proceed exactly as described above, always making several measurements of the sphere diameters. From the average of the data thus obtained, calculate the weight $W = (d^3 \times 0.5236) \times 13.59$.

[1] For gold, s = 19.33; silver = 10.4; platinum = 21.15; lead = 11.36; **mercury** = 13.59.

[2] Raaschou, Zeit. anal. Chem., **49** (1910), 172.

[3] See also page 319, Microchemical Detection of Mercury.

In estimating the percentage of the different fibers entering into the composition of a given sample of paper, it is customary in most commercial paper-testing laboratories to guess at the per cent of a given fiber without comparison with standards and without counting the fibers, the usual practice being for several analysts to "guess" at the composition independently. These men in time become very expert and their findings will generally check within one per cent. In the opinion of the author, comparing with known standards, using the comparison microscope or comparison eyepiece is quicker and gives a more reliable approximation.

Herzog[1] has suggested a microscopic method for the quantitative estimation of the different fibers in fabrics, or for the per cent of different colored fibers in a fabric. Stated briefly, the process is as follows: A tiny piece of the fabric is imbedded in paraffin (M.P. 60°) by repeated dipping. After cooling, sections about 0.1 to 0.2 millimeter are cut by means of a razor or microtome knife. One of the sections is transferred to an object slide, warmed until the paraffin melts and is tipped back and forth to evenly distribute the fiber fragments. A drop of balsam is placed upon a cover glass and lowered upon the preparation. The entire number of each different fiber is then ascertained by counting, using a net eyepiece micrometer. Having thus found the relative proportion of the fibers, their absolute size is next determined by measurements of length and thickness, or since the thickness of the section cut is known and the average diameter of different fibers is also well established, actual dimensional measurements may not be required. The weight is calculated by multiplying the absolute size by the number of fragments and the specific gravity of the fiber.

Quantitative microchemical methods with reference to the handling of minute amounts of material and weighing on a Nernst micro balance; the titration of tiny volumes of liquid; the measurement of tiny volumes of gas, etc., which do not require the application of the microscope need no discussion here,

[1] Herzog, Z. Chem. Ind. Kol., I (1907), 202. Z. Text. Ind., 1906, No. 4.

since we are dealing solely with the application of the microscope to the solution of chemical problems.[1]

Volume and Weight Per Cents from Area Measurements. — The quantitative analysis of heterogeneous material in thin sections through the determination of the areas occupied by the different components, as ascertained from their images when seen in the microscope, has long been employed by petrologists.

The process is briefly as follows: The outlines of the areas of the component under consideration, in a given field of the microscope, are traced upon coördinate paper by means of a drawing camera; the value of a square of the paper is ascertained with a stage micrometer as hereinbefore described. The areas of the tracing may then be computed or may be accurately determined by means of a planimeter. Or the preparation may be photographed with a coördinate (net-ruled) ocular in place, the value of the rulings in the image ascertained in the usual manner and the areas of the different component-sections in the photograph computed.[2]

From the computed areas, volume per cents may be calculated, and knowing the specific gravities of the components, weight per cents are easily ascertained.

This method of quantitative microscopic analysis has recently been applied by Johnson to the examination of concretes. He has shown [3] that it is a simple matter to ascertain, whether, in a given concrete structure, a contractor has complied with the specifications as to proportions of sand, gravel and cement and further whether the material was properly mixed and wetted.

Estimation of Molecular Weights by Micrometric Measurements. — Barger [4] has described a most ingenious micrometric method whereby the molecular weight of a substance may be determined, providing a large enough amount of the material for weighing upon an analytical balance is available.

A solution is made of known weight content of the substance

[1] See Donau, Die Arbeitsmethoden der Mikrochemie, Stuttgart, 1913.

[2] For further details as to rock analysis and for bibliography see Johannsen, Petrographic Methods, p. 290.

[3] Eng. Record, Mar. 1915.

[4] Barger. J. Chem. Soc. (London), **85** (1904), 286.

whose molecular weight is sought. A second solution of known strength is also made of a substance of known molecular weight. Drops of these two solutions are introduced alternately into a thin-walled capillary tube having a bore whose diameter is from 1 to 2 millimeters. The tube should be 6 to 8 centimeters long. Between the drops which occupy a space about 1 to 3 millimeters long there must be air spaces equal to approximately twice the lengths of the drops. The first and last drops should be those of the standard and from two to three times the length of the intermediate drops. After the drops are in place the capillary tube is sealed at both ends. The tube is then laid upon an object slide and cemented in place with Canada balsam or other suitable medium, the slide is then immersed in water in a suitable shallow vessel and placed under the microscope. By means of a micrometer the lengths of the drops are determined and recorded in scale divisions but not in absolute units. After standing for about an hour measurements are again made. Owing to differences in vapor pressure, some drops have increased in length; others have decreased.

The theory of the method is thus described by its author: "Each drop is placed between two others of a different solution, and can evaporate on either side into a small air-chamber. This chamber is soon saturated with vapor, which can condense freely on the drops. If the vapor pressures of the two solutions are equal the evaporation will equal the condensation, and there will be no change in volume of the drops. If, on the other hand, the vapor pressures are unequal, there will be a gradient of vapor pressure in the air spaces; some drops will therefore be in contact with an atmosphere, the vapor pressure of which is greater than their own. Condensation will take place on these drops and they will increase. The others, alternating with them, will have a vapor pressure greater than that of the adjoining air spaces; these drops will evaporate and thus decrease. Hence, there is a distillation from the drops of one series to those of the other series. By measurement we can tell which drops increase and hence ascertain which solution has the smaller vapor pressure. If the solvent is identical in both cases

and if the solutes are non-volatile, the solution with the smaller vapor pressure will have the greater concentration of molecules and *vice versa.*"

A series of tubes must be made in which the strength of the standard solution has been systematically varied in small fractions of a gram-molecule per liter. A tube is thus obtained in the series where there is little variation in the lengths of the drops of known and unknown or where there is change in the character of the variation, say from an increase in length to a decrease in length. It is evident that the molecular concentration of the unknown must correspond to that of the known solution at this point.

$$\text{Molecular weight} = \frac{\text{Weight of unknown in grams per liter}}{\text{Concentration in gram-molecules found}}.$$

This may be made clear by quoting one experiment: Standard used, cane sugar. Unknown, glucose. Solvent, water.

	Concentration of Standard in gram-molecules.	Nature of change in length of drop of unknown.
Tube 1	0.05	Increase
Tube 2	0.10	"
Tube 3	0.12	"
Tube 4	0.13	"
Tube 5	0.14	Decrease
Tube 6	0.15	"
Tube 7	0.20	"
Tube 8	0.25	"

It is evident therefore that the concentration of the unknown material lies between the concentrations of tubes number 4 and 5, that is between 0.13 and 0.14 gram-molecule per liter. Hence, molecular weight $= \frac{25.02}{0.14} = 179$, or $\frac{25.02}{0.13} = 192$. That is, the molecular weight of the unknown lies between 179 and 192; the average = 185.5. Calculated for glucose, $C_6H_{12}O_6 = 180$.

It appears from a very large number of experiments that this method is a simple and dependable one, apparently subject to errors no greater than those usually inherent in macroscopic molecular weight determinations.

As small amounts as 25 to 50 milligrams may successfully be used.

For special precautions, sources of error and suggestions as to the choice of solvents and standards, the student is referred to the original article.

This method of Barger's for the determination of molecular weights is another example of the manifold applications of the microscope. The microscopist whose laboratory is seldom equipped with apparatus for the determination of molecular weights by the usual methods of boiling or freezing points, or by vapor densities, may nevertheless obtain sufficiently accurate results for all practical purposes by the procedure outlined above.

The method is worthy of far more attention by analysts than it has been given.

CHAPTER XI.

THE DETERMINATION OF THE MELTING AND SUBLIMING POINTS OF MINUTE PARTICLES OF MATERIAL.

The determination of the melting point of a compound is usually one of the simplest and most reliable tests at our disposal for ascertaining the purity of a known compound or for obtaining an idea as to the probable nature of a substance of unknown composition. In the case of organic compounds the melting point is one of the first constants to be ascertained and even with certain inorganic substances a melting point determination may often prove of great value.

It not infrequently happens that such a small quantity of material is available that the usual laboratory methods are impracticable and recourse must be had to some microscopic method of procedure. Often, the chemist deals with material containing a large proportion of amorphous matter mixed with a crystalline substance and a satisfactory separation cannot be effected; or again, a preparation is obtained in which there appears to be two or more different crystalline substances but no means for separating them can be found. In all these cases a melting point would give the needed information were it possible to effect a separation.

By spreading out the material in a thin layer upon an object slide and examining the preparation with the microscope, we can almost always find crystals or fragments of material here and there not in direct contact with others, but appearing in the image isolated and free. We have thus in reality effected a separation and if we apply heat, we should be able to make reliable observations upon the behavior of each isolated particle. If in addition we have some means of controlling and measuring the heat applied, it is obvious that a melting point can be ascertained. Inasmuch as a variety of methods for temperature

measurements are available, it follows that melting-point determinations may be obtained of material actually invisible to the naked eye. Furthermore, these determinations will, in most cases, be as accurate as those made by the usual capillary-tube sulphuric-acid method.

Method A. (Approximate.) — Where a series of pure compounds, readily crystallizable and each of known melting point is at hand the melting point of an unknown substance may be ascertained approximately by placing similar sized fragments of the known and the unknown side by side at the corner of a thin object slide. The rotating stage of the microscope is removed and a piece of asbestos board, perforated at the center, substituted as a stage. A bent glass or quartz tube drawn out to a jet at one end serves as a tiny burner and may be fastened temporarily to the substage ring. The tiny burner is so adjusted that the flame falls nearly in the line of the optic axis of the microscope. The slide carrying the material to be tested is placed under the microscope and focused and the tiny flame is very slowly brought nearer the preparation by means of the screw which serves to raise or lower the substage. The behavior of the material is watched very closely through the microscope, to determine whether the known or the unknown substance melts first. Other compounds of known melting point are tried until a known compound is found with which the unknown simultaneously melts or the unknown is found to melt between the melting points of two knowns. This indirect method is quick and convenient where mere approximations are needed. The operator after one or two trials soon learns to judge the temperatures given by the tiny burner according to the size of its flame and the distance below the slide. When comparing melting points in this manner first try the pure material with which the unknown is believed to be identical. Place the two substances so close together on the slide that when they melt, the molten masses will flow together; if they melt simultaneously and mix to form a homogeneous melt, the presumption is strong that the two fragments are of the same composition. If so, when the melt solidifies (freezes) a single component will result.

Lehmann[1] long ago pointed out that this method of "fusion testing" could be made use of in qualitative analysis but the interpretation of the phenomena which may be observed, usually requires a profound knowledge of chemistry and much practice in manipulation.

In the Appendix will be found a table giving the melting points of compounds which can be employed in making estimations of melting points by the process described above.

Method B. (Exact.) — Melting points below the boiling point of water may be determined with great accuracy by means of a hot stage through which hot water is made to circulate. A convenient form of apparatus is shown in Fig. 119.[2] It consists

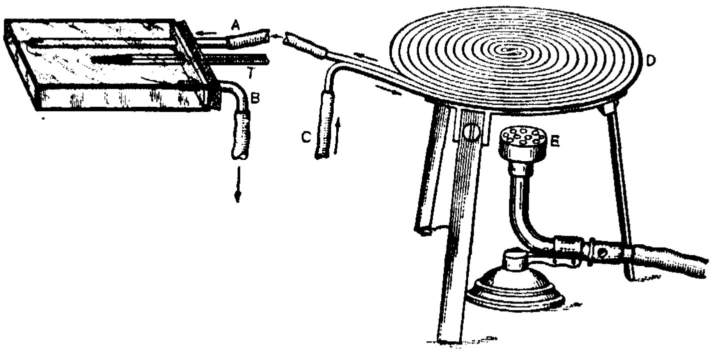

FIG. 119. Apparatus for the Determination of Low Melting Points.

of a glass box or trough, such as is commonly employed for the spectroscopic examination of liquids, the open end of which is provided with a wedge-shaped piece of rubber, forming a tight stopper. The hot water enters the cell through the glass tube A and escapes at B, the rate of flow being controlled by a stopcock or screw-clamp. The hot water may conveniently be obtained by siphoning it through a small coil of copper pipe D heated by a Bunsen burner E. Or the heating system devised for providing a continuous flow of hot water through a Zeiss

[1] O. Lehmann, Die Krystallanalyse, Leipzig, 1891.

[2] Chamot and Albrech, Unpublished paper presented to the Cornell Section, Am. Chem. Soc.; May, 1906.

butyrorefractometer may be employed. By regulating the heating flame and the rate of flow of hot water, very gradual or very rapid rises of temperature may be obtained or the temperature may be maintained almost constant. Jacketing the cell with asbestos simplifies the regulation of temperature. Heaters functioning on the principle of the thermo-siphon, Fig. 120, may also be employed for temperatures up to 85 to 90° C.; but above 90 degrees the regulation of the height of the heating flame becomes rather difficult and the sudden formation of steam usually results in a blow-off through the safety tube, in which the thermometer is only very closely inserted.

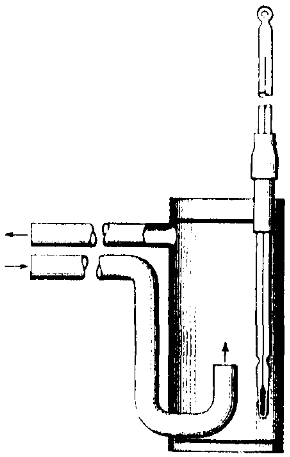

FIG. 120. Heater for Melting Point Apparatus.

Substituting brine or oil for water, the temperatures can be raised to 125–150 degrees if the heating coil be used, but the author has never found hot oil to give satisfactory results in any thermo-siphon system, since the viscosity of the oil in the glass cell is too great to permit an even and sufficiently rapid rate of flow unless large conducting pipes be employed, necessitating a cell far too thick for use.

The temperatures are most conveniently measured by means of a set of Anschütz thermometers. Thermometers of this type are sufficiently small, so as not to project too far, and their graduations are such as to permit readings to be taken to 0.1 degree.

A convenient arrangement for reading the thermometer and observing the melting point of the substance under observation is given below.

With hot stages of the sort just described it is always a wise precaution to place the cell in a glass tray or shallow crystallizing dish to guard against damage to the microscope should the hot stage break.

Any flat surfaced, stoppered container may serve as a hot stage, as, for example, a small flat bottle.

For temperatures above 150° C. the only convenient and universally applicable heating system is by means of an electric current, resistance wire and suitable rheostat. The heating coil in this case may consist of manganin, nichrome or platinum wire. To obtain the best and most reliable results part of the heating coil should be above the object being heated and part below.

Fig. 121 shows an electrically heated hot stage which has been in use in the author's laboratory for several years. It

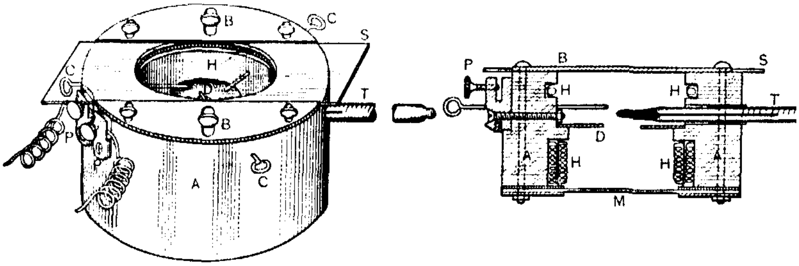

FIG. 121. Apparatus for the Determination of Melting and Subliming Points.

consists of a low cylinder of "Alberene stone" closed at the top and bottom by thin glass, or by mica when high temperatures are employed. The heating coil H, H consists of fine platinum wire wound in fine coils. In the illustration A shows the Alberene stone; B, brass guides for the object slide acting as cover; C, adjustable wire fingers for supporting cover glasses, tiny crucibles, "micro" retorts, etc.; D is a removable, thin brass diaphragm cutting down the opening of the stage and serving as a radiator; T, thermometer; PP, binding posts; M, mica or glass window closing the bottom of the hot stage; and S, the object slide cover. The method of inserting the hot stage for use in place of the rotating stage is shown in Fig. 122. By attaching an Abbe camera lucida to the microscope tube and properly tipping the mirror, the image of the scale of the thermometer may be so reflected as to be seen alongside of the material whose melting point is

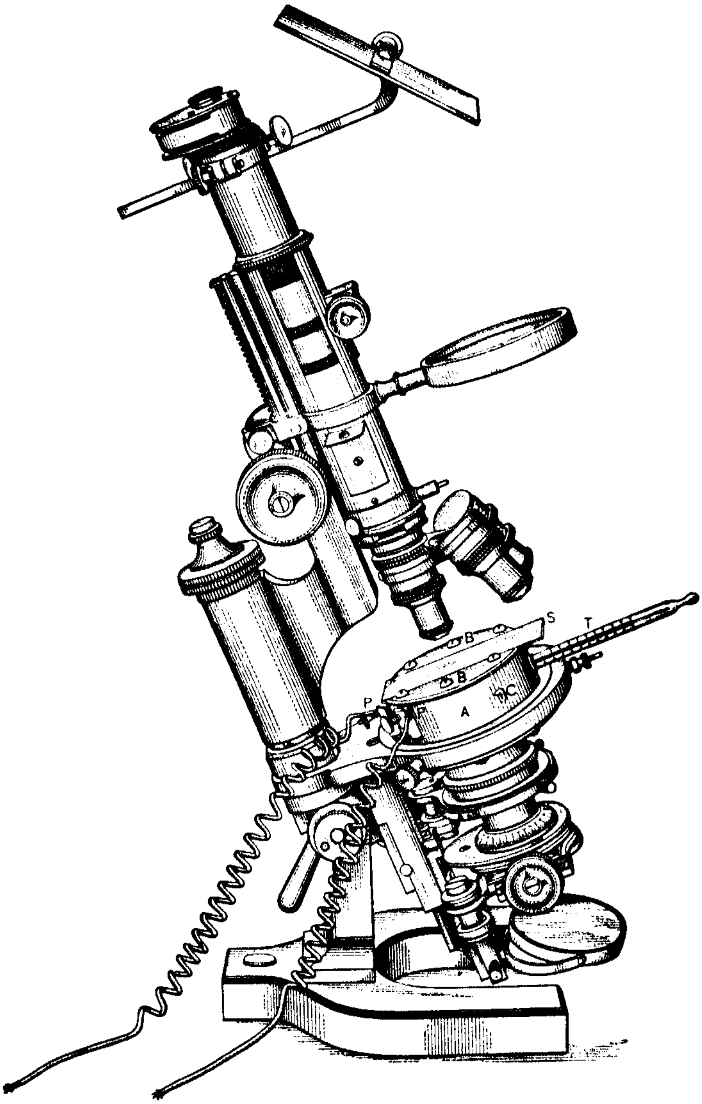

FIG. 122. Polarizing Microscope arranged for Observing Melting Points.

to be determined. A lens attached to the body-tube or held in a separate stand serves to magnify the thermometer scale. It is thus possible to look into the tube of the instrument and to watch both the material and the thermometer. This arrangement and its applications will be readily understood by reference to the illustration.

With platinum wire coils a temperature somewhat higher than 700° C. may be obtained in the apparatus.

The material to be tested may be either crystallized upon or supported on a small thin cover glass held by the wire fingers C or may be placed in a short piece, 5 millimeters long, of tiny thin-walled capillary tube fastened to the thermometer by a wire band. For ordinary materials these tubes are best held horizontally but for fats, waxes, etc., better results are obtained by slightly inclining the capillary and taking as the melting point the thermometer reading at the instant the fat slides out of focus.

The melting point of anisotropic substances is sharply obtained by making the observations with crossed nicols and a selenite plate; the change from solid to liquid of tiny particles is thus remarkably clear since they vanish instantly on melting. The hot stage should in such cases be provided with glass windows.

The upper window of the stage consists of a thin glass object slip (or one of mica or of quartz) held in place by the guides B, B, permitting sliding the cover. This is essential when dealing with materials which sublime, for in these cases the upper window becomes fogged with condensed material, and in such an event the cover is simply pushed along until a clear section is obtained.

In determining melting points with any type of hot stage, it is obvious that the usual procedure should be followed, namely: make a preliminary observation and then start anew, raising the temperature very gradually as the melting point first observed is approached.

Determinations of the subliming points of tiny particles may also be made by means of the hot stage.

Electrically heated stages of several forms and for different

ranges of temperature may now be had from several different optical firms.[1]

The Determination of Subliming Points may be made in the hot stage illustrated in Figs. 121 and 122, or by the crucible method of Blyth described on page 243.

[1] E. Leitz, Wetzlar, Germany, manufactures some especially convenient hot stages. For other types of hot stage see Cram, J. Am. Chem. Soc., **34** (1912), 954; and Cottrell, J. Am. Chem. Soc., **34** (1912), 1328.

CHAPTER XII.

METHODS FOR THE HANDLING OF SMALL AMOUNTS OF MATERIAL.

Microchemical Methods. — By microchemical methods we generally mean the application of chemical operations to the examination and study of very small quantities of material. The chief chemical operations with which we have to deal are: 1. Solution; 2. Decantation; 3. Filtration; 4. Sublimation; 5. Distillation; 6. Precipitation; 7. Ignition, Fusion, and Miscellaneous Treatments.

Since success in chemical microscopy requires skill in the technique of these operations each one will be discussed at length.

1. **Solution. Testing for Solubility.** — At the corner of a perfectly clean object slide of glass, quartz, or celluloid, place a small drop of water (or other solvent); the drop should be 3 to 4 millimeters in diameter and about 1 millimeter deep. Place close to this drop a tiny fragment of the material whose solubility is to be tested. Transfer the glass slip to the stage of the microscope and focus with a low power objective upon the edge of the drop nearest the fragment. See that the illumination, using an Abbe condenser, is carefully adjusted, and that the iris diaphragm is at least two-thirds closed. By means of a glass rod drawn out fine, a platinum wire or a stiff hair, slowly push the fragment into the drop, at the same time looking into the instrument so as to be able to note the phenomena which may take place the instant the material enters the solvent; for example, the substance may merely "melt" away, or it may decrepitate, or give off bubbles of gas, or it may dissolve with decomposition (hydrolise), etc. A little practice is often necessary to enable the beginner to push substances into drops of solvent while looking into the instrument. It is of course

necessary to remember that directions are reversed in the image formed by the microscope and seen by the worker, but if this is borne in mind there will soon be no difficulty in moving and turning objects while observing them through the microscope.

If, after a few minutes, there appears to be no change in the appearance or size of the material being tested, warm the drop gently by holding it a second or two about one centimeter above the "reserve" or "pilot" flame of the laboratory burner (see Fig. 73, page 127). This tiny flame should be so regulated by means of the set screw as not to be over 5 millimeters high. Cool the preparation quickly by holding the slip for an instant in contact with a smooth metal block placed for this purpose near the burner, or, in the absence of such a cooling device, place the slide on the base of the microscope. Examine the fragment of material to be tested and note any change in its appearance and size.

To heat a solution to boiling have a large drop at the very corner of a glass slip, tip the slip slightly so that the drop flows toward the corner and hold it so that the tip of the micro-flame (pilot flame) touches the glass just below the upper edge of the inclined drop. Watch closely and as soon as bubbles rise, remove from the flame and *cool instantly* by bringing in contact with a cool metal surface. It is necessary to work quickly, otherwise the evaporation will be so great that the preparation will become dry. *Never place a hot slide on the stage of the microscope*, for the stage may be seriously damaged and the vapors arising will condense upon the objectives injuring them. Since the drop has been placed at the corner of the slide there is no danger of the glass cracking or breaking on heating, an accident that will almost invariably happen if the glass slip is heated at any other point than a corner. If quartz or platinum slips are used, heating at the corner is not essential to prevent breakage, but is more convenient.

To determine whether any material has passed into solution, decant the liquid from the undissolved material (see Decanting below), and evaporate to dryness very carefully. In evaporating drops to dryness, never keep the material over the flame until all the liquid has been driven off. Simply warm the prepa-

ration, then remove it from the flame and blow gently upon the warm drop, heat again and again blow; repeat the process until the solvent has been driven off. If this method is followed, a uniform, closely adhering film will result instead of irregularly distributed loose particles, and the danger of loss through decrepitation of the tiny solid particles is avoided.

It is essential to remember that it is impossible to obtain slips made of sufficiently resistant glass upon which water will not exert a marked solvent action; moreover, it must constantly be borne in mind that all liquids soon take up foreign matter from the bottles in which they are kept. The results of tests for solubility should always be checked by comparison with the residues left when the solvent alone is evaporated under exactly the same conditions.

It follows therefore that tests for the solubility of substances in boiling liquids or in strong acids, alkalies, etc., should be performed on clean, bright platinum foil; the solvent is decanted, concentrated and only transferred to a glass or quartz slip when evaporated almost to dryness.

Should the illuminating gas be of very poor quality and the heating prolonged, an amount of various ammoniacal, sulphur and other products may be absorbed by the solvent sufficient to vitiate the results.

If the substance whose solubility is being tested is subsequently to be analyzed, a sufficient quantity of it is tested on glass, quartz or platinum, according to the necessities of the case, care being taken to observe the precautions given above as to impurities in solvents and the probability of their action on the microscopic slides used. This action may not always be due to the solvents alone, but may be the result of the material being tested. When more than one solvent has been found, the choice will, of course, be governed by many circumstances. It is obvious that no fixed rule may be given which will apply to even a majority of cases. Much must always be left to the judgment of the analyst.

Decantation. — For most purposes, it is generally possible to obtain sufficiently clear solutions from drops containing precipi-

tates or fragments by drawing off the supernatant liquid, without being obliged to resort to the longer and more tedious methods of filtration. Success in drawing off a liquid requires, in the first place, a perfectly clean slide free from grease, otherwise the liquid will not flow properly; and, secondly, patience, care and a steady hand. The first requirement is met by treating the slides in one of the usual cleaning mixtures of which the chromic-sulphuric acid is the best, and subsequently thoroughly washing them. Sometimes placing a drop or two of ammonium hydroxide on the slide and wiping it dry with a clean cloth will materially improve the surface. The other requisites for successful decantation are dependent upon the manipulative ability of the analyst and may be acquired only by practice.

Although the phrase synonymous with decantation — drawing-off — is self-explanatory and the method is quite obvious, there are, nevertheless, several points upon which the success of the operation depends.

Assuming that the drop of liquid is situated, as usual, at the corner of the slide, the operator proceeds as follows: The slide is held in a horizontal position; the end of a drawn-out glass rod or a platinum wire is carefully introduced into the edge of the drop and is then slowly drawn across the slide (the slide being simultaneously slightly inclined in the same direction) until a distance of about one centimeter is reached. If the slide is perfectly clean the liquid will follow the rod or wire in a narrow stream. A circular motion is now given the rod, resulting in the spreading out of the little stream into a drop; this induces a flow of the liquid from the original drop. The steps in the decantation are indicated in Fig. 123. The flow is aided by increasing the angle of inclination of the slide, providing, of course, there is no tendency on the part of the sediment to flow with the liquid. The important points, which can be learned only by practice, are the proper angle and the rate and manner of spreading out the drop. Should there be any tendency of the sediment to pass over with the liquid, reduce the angle at once. If the sediment tends to form a dam and prevent the passage of the clear liquid, it is necessary to start a new current at one side of the barrier or to break

the latter down at a suitable point. As soon as the proper volume of liquid has been drawn off, still holding the slide inclined, a piece of filter or folded lens paper is drawn through the channel, between the two drops at C, Fig. 123, and the preparation immediately heated gently over the micro-flame at this same point. The result of this heating is the separation of the two drops by a dry space; thus there is no danger of the decanted liquid flowing back when the slide is again placed in a horizontal position.

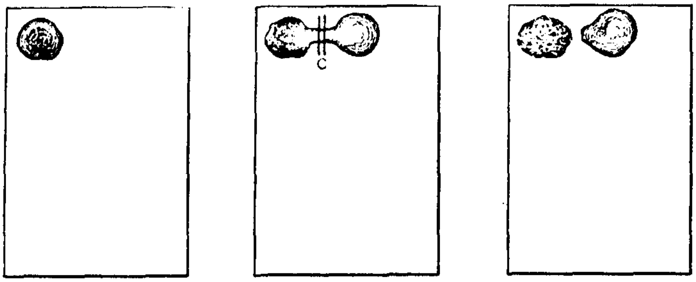

FIG. 123. Decanting a Drop of Liquid from a Precipitate.

When the clear decanted liquid is not wanted for analysis and only the sediment, or precipitate, in the original drop is to be utilized, the decanted portion and connecting stream are both wiped off the slide with filter paper while the slide is inclined and the preparation heated gently below the wiped-off drop to prevent any farther spreading.

In cases where the sediment in the drop persists in flowing with the liquid being drawn off, and where heating is not objectionable, the slide is tipped so as to cause all the liquid to again flow back into the original source and the drop is evaporated to dryness at a low temperature, exceptional care being taken to prevent heating the residue after evaporation. This step will usually cause the sediment to cling to the glass and to agglutinate. A drop of water or the proper liquid is then carefully added, the preparation allowed to stand a few seconds to permit the soluble compounds to pass into solution and the solution then decanted as above described. Usually a clear liquid may now be obtained without difficulty.

Liquids which have been decanted but which are not sufficiently clear may be evaporated and treated by the method described in the preceding paragraph.

Washing precipitates by decantation may be performed by drawing off the liquid as above, adding a drop of washing liquid to the residue, allowing to stand for a few seconds and drawing off as before. The process is repeated as long as is thought necessary, or until tests applied to the decanted liquid prove that the washing is sufficiently complete. It is obvious that with a pure solvent, containing no compounds in solution, the simplest test is evaporation to dryness and the obtaining of no perceptible residue.

In the event of a number of drops being obtained in the process of washing, all of which must be saved and united for subsequent examination, it is best to transfer them to a second clean slide; this is done by decanting into the extreme corner of the slide, cutting off the stream with filter paper and warming as already described. Now slowly raise the slide to an almost vertical position and bring the corner, holding the decanted drop, in contact with the slide prepared to receive it. Touch the drop at the corner with a drawn-out glass rod or platinum wire and the drop will flow at once on to the slide below. Raise the vertically held slide and warm its corner over the micro-flame, wash the residue as before and again transfer. The united washings may afterward be concentrated to the proper volume by evaporation.

In all cases where decantation is to be practiced the size of the drop to be treated must be somewhat larger than that employed in tests alone.

Decantation by Means of the Centrifuge. — Next in importance to the methods above described for separating sediment from liquid must be placed the centrifugal machine.

A "two-speed" machine, with hematokrit frame, should be purchased,[1] since it is seldom that sufficient liquid is available in ordinary microchemical work to permit of the usual sedimentation tubes being employed. With the hematokrit attachment,

[1] A convenient form of machine is shown in Fig. 76.

however, very small quantities of liquids can be handled, and the high speed obtainable will throw out even a precipitate whose specific gravity differs but little from the liquid in which it is suspended.

A convenient form of tube for use at high speeds may be made as follows: An ordinary glass tube of proper size is drawn out to a point in the flame of the blast lamp, and then, by continued heating, the glass is allowed to thicken a little at the end; the end is pressed, while still soft, against a piece of asbestos board, or a piece of charcoal, to flatten it sufficiently to fit well in the hematokrit frame. The tube is then cut the proper length, and the upper end smoothed with a file or rounded in the lamp flame. The turbid liquid to be treated is introduced into the tube by means of a pipette with long capillary end, and the tube is then placed in the frame; a similar tube is filled with water to the same height, and is placed in the other side as a balance. Thus arranged, the machine is turned at such speed and for such a time as may be necessary to yield a clear liquid.

The treatment to which the sedimentation tube is then subjected will depend upon whether the liquid or the sediment (or both) is wanted. When the clear supernatant liquid is required, it is removed by means of a pipette with long capillary tip. But when the precipitate alone is needed the clear liquid is most conveniently removed by capillary tubes, made by drawing out odds and ends of glass tubing. With such tubes it is only necessary to touch the liquid, which will immediately be drawn up by capillarity; the tubes filled as far as the force will raise the liquid are thrown away. One tube after another is inserted until the liquid is lowered to a point just above the sediment. Distilled water is introduced, and if the precipitate is to be washed, the contents of the tube are mixed well with a platinum wire, and the tube is again whirled to effect a separation; for most purposes one washing is sufficient. The wash water is removed as before, and if the amount of sediment is very small, the tube is cut off just above it to enable easy removal of the solid material. The upper part of the tube is not wasted, but serves to make capillary tubes. These small sedimentation tubes are easily and quickly

made. A stock should be provided so that a number are always on hand. It will be found convenient to have sedimentation tubes of different diameters, to permit varying amounts of liquid being used. Similarly constructed smaller tubes of thinner wall can be made to fit inside the ordinary "sputum" tubes usually furnished with the centrifuge.

Once having become accustomed to using this instrument, the worker in microchemistry will find that the two-speed centrifuge is an almost indispensable instrument, which will enable him to meet with ease all sorts of problems involving the separation of solids and liquids that would otherwise tax his patience and ingenuity.

Especially to be recommended are electrically driven centrifuges provided with protecting hoods.

When dealing with relatively large volumes of liquid the usual conical sedimentation tubes, shown in Fig. 76, will prove useful, but since it is usually the sediment which is to be subjected to examination or analysis, and rarely the liquid, it will be found more convenient to employ tubes drawn down to a fairly long pointed end which may be cut off with a file scratch just above the sediment, thus permitting easy access to the solids thrown out from suspension. When properly drawn down, tubes of this form can be used several times by simply sealing the end; the tubes are centered and held in the aluminum carriers by means of perforated corks.

Occasionally tubes with removable parts will be found to be convenient; the best forms are those devised by T. W. Richards[1] for the separation of small quantities of crystals from mother liquor. The construction and method of employment of these tubes will be readily understood by reference to Fig. 124.

When one of the modern large electric laboratory centrifugal machines[2] is available very minute amounts of suspended matter may be separated from large volumes of liquid with great ease. The most convenient form of apparatus for this purpose consists in fitting a Squibb's separatory funnel with a stopcock of

[1] Richards, J. Amer. Chem. Soc., **27** (1905) 104.

[2] As for example the Bausch and Lomb Precision Centrifuge.

the type provided in a Spaeth sedimentation glass, as shown in Fig. 125. Upon being whirled in the machine the suspended matter is forced into the conical cavity in the stopcock; a quarter turn of the stopcock completely cuts off the sediment from the

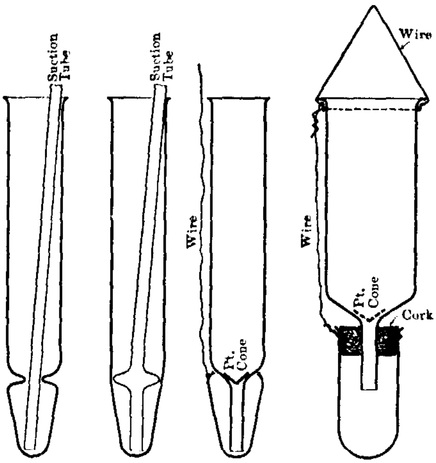

FIG. 124. Richards Tubes for Centrifugal Separations.

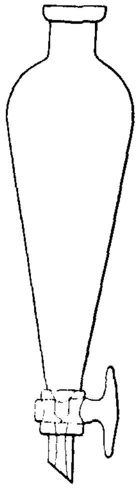

FIG. 125. Sedimentation Funnel for Large Centrifugal Machines.

liquid and the latter can be poured off without danger of disturbing the sediment; the stopcock can then be removed, and the contents of the cavity, containing only a very small volume of the solution and all the suspended matter originally present, subjected to examination and analysis.

Filtration. — In spite of every precaution it frequently happens that decantation will not yield a sufficiently clear liquid for subsequent reactions, or that the precipitate cannot be freed of the mother liquor, and that centrifugal separation cannot be used. Under such circumstances recourse must be had to filtration, which is doubtless one of the most troublesome processes of microchemical work. Since, in the majority of cases, the amount of liquid to be filtered consists of two or three small drops, often less, methods involving the use of a funnel, be it ever so small,

are to be regarded as unsatisfactory. In this category must be placed the ingenious filtering device of Haushofer,[1] for it is too cumbersome, complicated, requires too much time, and necessitates the transferring of the solution from the slide to the filtering apparatus, and back again to a slide.

There are at present several practical and convenient methods for filtering small volumes of liquid, all based upon drawing the liquid through a tiny bit of filter paper held at one end by a glass tube of small or capillary bore while suction is applied at the other. The fundamental differences lie chiefly in the manner of applying the filtering material. None of these are to be recommended for qualitative analyses.

The simplest, quickest and most useful method is that of Behrens.[2] A filtering tube is prepared, Fig. 126, consisting of a glass tube F about 60 millimeters long, and of 1.5 to 2 millimeters bore, with walls about 1 millimeter thick. One end is ground smooth and exactly at right angles to the axis; the other end is rounded so as to permit the easy attachment of a small piece of rubber tube R, about 80 millimeters long, carrying a piece of glass tube M for a mouthpiece.

The preparation of the filter and the operation of filtering a liquid is performed as follows: A square piece of thick soft filter paper P of close texture is cut slightly larger than the diameter of the tube, and is placed on the slide S (which lies horizontally on the table) close to the drop D to be filtered; the *ground end* of the tube is pressed firmly against the filter paper near one edge; the whole is then moved slowly into the drop; as soon as the paper is wet, gentle suction is applied to the upper end of the tube by the mouth, through the agency of the rubber tube. At the same time the filter paper is slowly advanced still further into the drop, the precipitate unless exceedingly fine will be pushed along in a ridge before the advancing paper and the liquid will rise in the tube. Care must now be taken to keep the rubber tube slightly curved, as shown in the cut. As soon as sufficient liquid has risen into the glass tube, suction is discontinued, the

[1] Haushofer, Mikroskopische Reactionen, Braunschweig, 1885, p. 160.

[2] Behrens, Anleitung Mikrochem. Anal., p. 22.

rubber tube compressed at its upper end between the fingers and is simultaneously straightened to prevent the forcing out of the liquid. To lift the tube from the slide and the piece of filter paper, stretch the rubber tube very gently and raise the whole apparatus. The filtrate contained in the tube is removed by bringing the ground end in contact with a slide and bending the rubber tube, the upper end of which is kept closed; the liquid will generally flow out at once; if not, straighten the tube, open the upper end and blow *very gently*, but only just sufficiently to expel the drops.

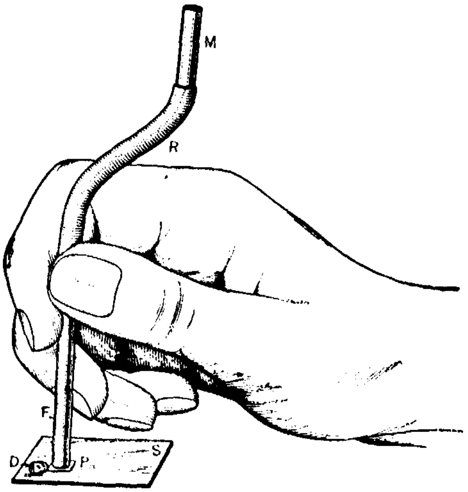

FIG. 126. Behrens Method of Filtration.

A little practice is required in order to apply the proper pressure of the glass tube upon the filter paper and to maintain this pressure uniformly without tipping the tube out of its vertical position.

The chief difficulties encountered in rapid work are: (1) The danger of carrying the filtrate up into the mouth or into the rubber tube by air bubbles, which are always drawn into the tube when the liquid to be filtered has all been absorbed by the filter paper and sucked into the tube, and (2), it not infrequently happens that the filtered liquid begins to flow out when suction

is stopped and before there is time to prevent it by closing the upper end of the tube. These difficulties may be overcome by a modification of the simple filtering tube,[1] consisting of the introduction of an inner tube or trap. A glass tube about 3½ millimeters internal diameter has fused into its vertical axis a tiny tube about 1 millimeter in diameter and 7 to 8 millimeters long. The lower end of the main tube is caused to flow together until the central opening is about 2 millimeters in diameter, and it is then ground so as to give a perfectly flat surface. The apparatus, which is 30 millimeters long, is attached to a rubber tube and is employed in the same manner as the previously described filter-tube. It is obvious that as the filtrate rises in the tube it overflows into the small trap and is held in the space between the walls of the outer and inner tubes. The tube through which the liquid rises is therefore free, and any air bubbles entering cannot cause a loss of the filtrate, nor can the liquid flow back if suction is stopped. The filtrate can be removed either by means of a drawn-out pipette or by inverting the tube and inducing the liquid to flow by means of a platinum wire.

Savage[2] introduces the filter paper within the tube, making the manipulation somewhat simpler, the filtering of liquids from very fine precipitates somewhat easier and permits of handling larger volumes of liquid. But this method fails to handle as tiny quantities of liquid as that of Behrens and the residue is not so readily separated from the filter. Savage describes his method as follows:

"A glass tube of about 4 millimeters inside diameter is drawn out as abrupt as possible, and the narrow portion of the tube should extend from 15 to 30 millimeters from this point, with parallel sides and an inside diameter of about eight-tenths of a millimeter. The entire tube is 8 or 9 centimeters long, and both ends are rounded in the lamp flame. From a piece of soft filter paper of smooth surface and long fiber a triangular piece is torn (not cut), 2 to 2½ centimeters long and 1 centimeter wide at the base. This is rolled between the fingers into a slightly taper-

[1] Chamot, Jour. Appl. Micros., **3**, 854.
[2] Savage, Jour. App. Micros., **3** (1900), 678.

ing, cigar-shaped plug. It should be rolled dry and rolled long enough to make it fine and even. If the paper is cut, not torn, there will be a seam in it, and it cannot be so readily made tight. The plug thus formed is inserted in the small end of the tube from the outside and worked in by rotating the tube until from 4 to 8 millimeters of the paper are within. The rest of the paper is then cut off a millimeter or two from the end of the tube."

The filter is first moistened with distilled water and then inserted in the drop to be filtered, suction is applied to the larger end and the clear liquid drawn up through the filter into the tube, from which it is removed by a capillary pipette or by carefully removing the filter paper with a pair of fine forceps and expelling the liquid in exactly the same manner as in the Behrens method.

A tightly rolled cigar-shaped plug of filter paper or fibrous asbestos may be inserted in a straight Behrens tube in a similar manner to that described above, and will be found to yield even more satisfactory results than the fragile drawn-out tube of Savage.

The author has found in certain instances that alundum filters have proved of great value. Such filters are made by grinding tiny conical plugs from pieces of broken alundum crucibles and fusing these plugs into the ends of glass tubes 2 to 2.5 millimeters in diameter and 50 to 60 millimeters long. After fusing, exceptional care must be taken in cooling and annealing. In like manner porous porcelain plugs may be used, but in such an event a powerful suction pump is required, suction by means of the mouth being insufficient to cause the passage of the liquid.

Sublimation. — This operation, though of somewhat limited application and comparatively seldom employed in inorganic qualitative analysis, is so very important, and of such inestimable value in the examination of organic compounds, that every worker should become thoroughly familiar with it, particularly with the method of performing fractional sublimations.

The usual method is that of sublimation from one slide to another. The material to be tested is placed at the corner of a *thin* slide. If it is a solid it is wise to moisten it with water and then dry it thoroughly; this will generally effectually prevent

the material from being blown off by air currents, and brings the substance in intimate contact with the glass slide — a matter of prime importance. If the material is already in solution, evaporate a tiny drop, but in this case it should not be spread out, as is commonly done with test drops. When the drop is dry, add another tiny drop on top of the residue left by the first; this in turn is dried, the process being repeated until, in the judgment of the operator, there is sufficient material for work. In all cases the residue to be treated should occupy but little space, yet should not be too thick, since, if fractional sublimation is to be practiced, a thick mass is apt to be heated unequally and fallacious results will be obtained.

Everything being ready, the slide is held in the left hand and the heating begun over the micro-flame, not directly beneath the spot of material, but slightly nearer the center of the slide. This is done in order to avoid raising the temperature too rapidly and too high. As soon as the sublimation point is almost reached (which can easily be recognized by practice) a second clean slide, carrying a drop or two of water, is taken in the right hand and lowered over the first slip, with the drop of water on the upper side directly over the material to be sublimed. The drop of water has for its object the keeping of the upper slide cool, thus far more effectually condensing any vapors produced by the heating. The receiving slide is supported on an edge of the other and is brought to within 2 to 4 millimeters of the substance (see diagram, Fig. 127). The temperature is gradually raised by moving the spot of substance nearer the flame. As soon as there is evidence of the appearance of a sublimate, raise the two slides above the flame so as to prevent too rapid vaporization. The

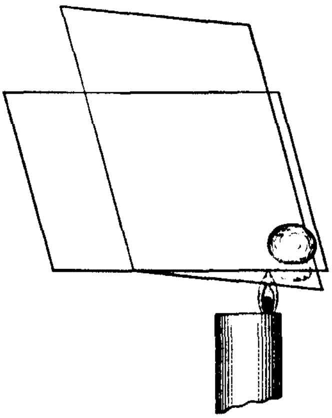

FIG. 127. Sublimation of Material from One Object Slide to Another.

first deposit being obtained, the receiving slide is moved along a few millimeters and a second sublimation made; again the slides are partly removed from the source of heat, the receiving slide moved along a trifle, and again the temperature is raised until a third film has been condensed. The process is continued as long as the material holds out on the first slide or fails to yield any further sublimate. If the drops of water, used to keep the receiver cool, evaporate, replace them by others. When dealing with compounds which melt on heating, the supporting slide must be slightly inclined so as to keep the material at the corner of the slide. Or we may sublime from a watch glass upon an object slide, as shown in Fig. 129, page 245.

It sometimes happens that a more crystalline and characteristic sublimation film is to be obtained when the receiving slide is slightly warm, in which event the water is omitted, or, if this is not sufficient, a little cylinder made of carbon, such as is used in arc lamps, is warmed over a burner and placed upon the slide. Such pieces of carbon remain warm for some time and will be found to give excellent results.

With the beginner it is always best to obtain each fractional sublimate upon a separate slide, carefully laying them down film side up in the order in which they have been obtained. Otherwise the films first formed are apt to be driven off by the increasing heat required to vaporize the last portions or will be rubbed off by the fingers or by contact with the support.

When a series of sublimation films are obtained upon a single slide always see that the films succeed each other in such a manner as to bring the first ones farther and farther from the source of heat as each film in turn is formed.

When dealing with sublimations taking place only at temperatures so high that ordinary glass will soften, quartz slips may be employed or nickel or platinum foil or small nickel or platinum spatulas. The method of procedure will in any event be similar to that above described, intimate contact between substance and support being first accomplished when possible by moistening with water and careful drying.

The temperatures of sublimation may be determined by means

of a hot stage such as that described on page 224 or by the method recommended by A. W. Blyth.[1] A small porcelain crucible is nearly filled with mercury, into which dips the bulb of a thermometer. A thin cover glass, bearing at its center the material to be tested, moistened and dried as usual, is floated on the surface of the mercury. Upon the cover glass is placed a low glass cell whose upper and lower rims are accurately ground. A second cover glass is placed above to receive the film — see diagram, Fig. 128. A number of clean covers should be placed near at hand. The crucible is heated over the low flame of a Bunsen burner. As the temperature rises, the covers are changed, by means of a pair of forceps, every five or ten degrees. The cover glasses are examined under the microscope, and a decision made as to the temperature of sublimation. A second and even a third experiment should always be made. If the material fails to sublime at a temperature below that at which the mercury itself is volatilized, a bath of a suitable low-melting alloy must be used. For accurate measurements it is essential to protect the crucible and cell from the cooling effects of air currents.

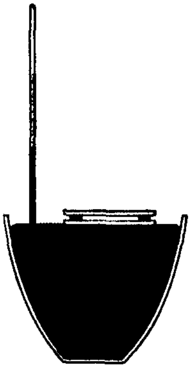

FIG. 128. Crucible Method of Microsublimation.

Subliming upon a glass object slide as shown in Fig. 127 is impracticable when only a minute quantity of the material is available since the losses through incomplete condensation are considerable. In such an event it is safer to employ the device shown in Fig. 130, page 245, primarily intended for distillation but yielding good results with solids as well as with liquids. When, however, only an excessively small amount of material is to be tested as in toxicological analysis, it is better to drop the substance into a thin-walled glass tube of not over 1 millimeter in diameter, sealed at one end. Tap the tube gently so as to collect all of the material at the sealed end. With a very fine blastlamp flame draw out the open end to a hair-like capillary tube,

[1] Poisons: Their Effects and Detection, 259, 4th Edition, London, 1906.

and after cooling, gently heat the material in a hot stage of the type shown in Fig. 121, until sublimation takes place. The chief difficulty with the tube method lies in the fact that the poor quality of the glass, the striations, air bubbles, and defects render the examination of the sublimate complicated and difficult. Laying the tube in a drop of oil or of glycerine at the point where the sublimate appears facilitates the study, by preventing the formation of heavy black contour bands.

Distillation. — Simple as well as fractional distillations are as important in the separation and identification of compounds in microchemical analysis as in the usual methods on a larger scale, and although one of the most difficult of microchemical methods may, nevertheless, with care and patience, be performed as successfully as the series of fractional distillations on the usual scale of the chemical laboratory.

The simplest of the distillation problems arises in the detection of a volatile constituent which can be expelled from non-volatile material by heating after the addition of a suitable reagent, as, for example, in the detection of ammonia by expulsion from material made alkaline with sodium hydroxide or in the detection of inorganic or organic acids set free from their salts by phosphoric acid and expelled by heat. The method of procedure is as follows: Place in a deep 25-millimeter watch glass a tiny bunch of fibrous asbestos which has just been ignited to redness by being held with the forceps in the flame of a Bunsen burner. In the absence of asbestos pure glass wool or in certain cases even a piece of filter paper may be employed as the absorbent, but if filter paper is employed a blank must always be made to prove that no misleading substances result. The asbestos or glass wool prevents the spurting and splashing of the liquid. Upon the absorbent is placed a small amount of the material to be tested, sufficient water and enough expelling reagent to just thoroughly moisten the mass but no more. Invert over the watch glass thus prepared a glass slide, bearing at its center a minute drop of water about 1 millimeter in diameter which has been acidulated or made alkaline as the case requires. Hold the watch glass thus covered by grasping its edges between the

thumb and forefinger, place a cooling drop of water upon the top of the slide and heat the watch glass gently over a micro-flame (Fig. 129) until vapors begin to condense upon the object slide. Heating to violent boiling must be avoided. The cooling drop upon the upper surface of the object slide is removed, the slide raised from the watch glass and turned over with a quick movement. The proper reagents for disclosing the presence of the constituent being sought are added and the resulting preparation examined with the microscope.

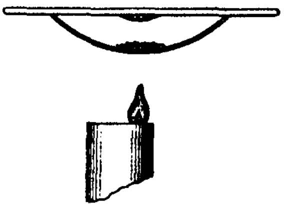

FIG. 129. Watch-glass Method of Distillation.

The method just described is applicable only to easily volatilized substances and where prolonged heating is unnecessary, but even in expelling ammonia, the fingers become uncomfortably hot. To avoid this discomfort the distilling device shown in Figs. 130 and 131 may be employed. It consists of a tiny glass

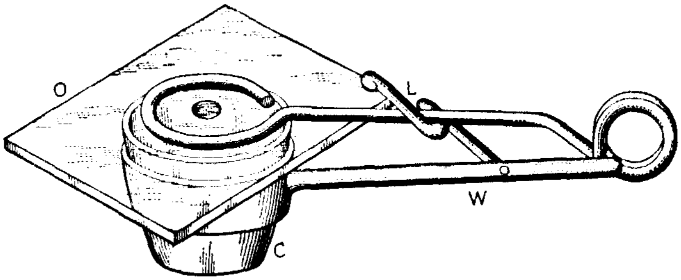

FIG. 130. Apparatus for Microchemical Distillations. (Slightly Enlarged.)

crucible C, whose upper edge is ground smooth and true, a supporting clamp made of spring brass wire W and an ordinary short object slide O. The component parts are shown in Fig. 131, and the apparatus in use in Fig. 130. Just as in the watch glass method fibrous asbestos or glass wool is employed as an absorbent, an acidulated or alkaline drop serves to retain the volatile constituent and a cooling drop is placed upon the upper surface of the condensing slide. A lever L serves to keep the

clamp open when removing or changing the object slide serving as a cover.

Instead of holding the watch glass and cover, at the edges, between the thumb and finger as described above, the clamp shown in Fig. 131 may be used, or two watch glasses with ground

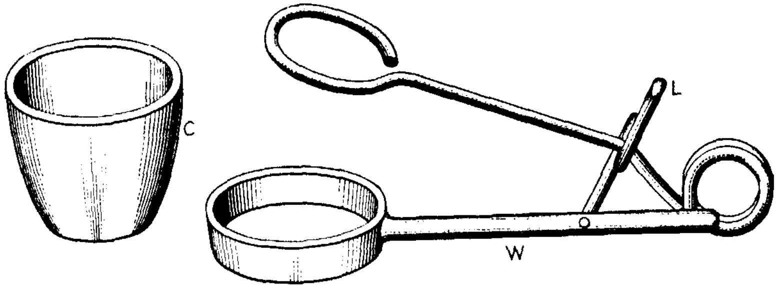

FIG. 131.

edges selected to fit edge to edge may be clamped together. In certain instances either one of these watch glass methods may prove to be more practicable than the crucible. In all cases, however, the clamp support is far superior to the fingers.

Although the device just described may be satisfactorily applied to the fractional distillation of small amounts of volatile liquids, small distilling tubes of the form suggested by Behrens[1] will be found in certain cases to be somewhat safer for very volatile substances. These are readily made from small glass tubing of thin wall as shown in Fig. 132; the different steps in the preparation are indicated in 1, 2, 3, 4 and 5. The finished distilling tube is shown in A. To introduce the liquid to be distilled into one of the tiny bulbs, fuse the end of one of the projecting tubes, cool thoroughly and introduce the end of the open tube into the drop of liquid, warm the upper bulb to drive out air and allow to cool with the tube still dipping into the liquid. If an insufficient quantity of the liquid enters, heat again just enough to drive out all but a *trace* of liquid, then dip the end below the liquid to be tested and heat the lower bulb until the contents are

[1] Anleitung z. mikrochem. Anal. (2 Auf.), p. 140.

vaporized; on cooling the bulb will fill with sufficient liquid. Now open the fused end of the tube and close that end of the tube through which the bulb was filled. Heat the empty bulb just enough to drive out any material which may have found its way therein. When absolutely cold, heat the liquid gently, distilling it over into the empty bulb. The distillate is expelled by carefully tipping the apparatus on its side and gently warming the air entrapped back of the distillate, or cut off the sealed end and blow gently.

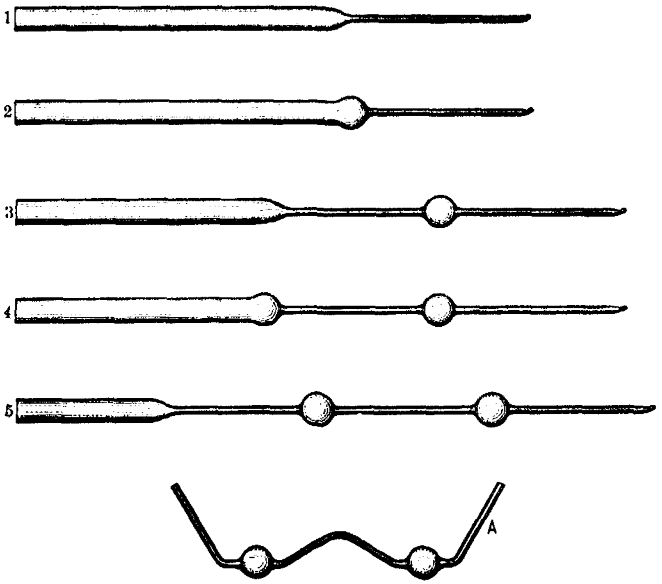

FIG. 132. Steps in the Preparation of a Behrens Distilling Tube. (Full Size.)

A more universally applicable distilling tube is shown in Fig. 133. It consists essentially of a tiny tubulated retort with attached receiver. The liquid is introduced through the side arm which is then closed with a tiny plug of cork or rubber or by fusing. Upon heating the liquid the vapors pass down the narrow inclined tube, are condensed and collect in the rounded receptacle. To prevent loss the narrow tube between retort and receiver may be wound with wet filter paper. The distillate

is removed from time to time by means of capillary pipettes. This little apparatus also makes a convenient generator for hydrogen and arsine in testing for arsenic.

When temperatures of vaporization are needed the bulb containing the liquid can be introduced into the hot stage described

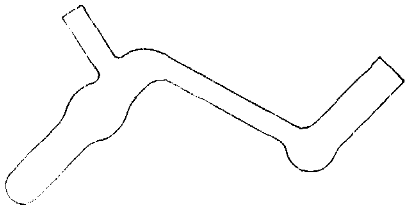

FIG. 133. Tube for Microchemical Distillations. (Full Size.)

on page 224, the receiving bulb being kept outside of the stage and cooled with wet filter paper, the tube connecting the two little bulbs having been bent at the proper angle.

Ignition, Fusion, etc. — Operations involving heating to redness are best performed in small platinum cups or spoons, Fig. 134, over the low flame of a Bunsen burner or that of a miniature blast lamp.

FIG. 134. Platinum Cups for Fusions. (Full Size.)

FIG. 135. Casserole for Microchemical Analysis. (Full Size.)

In the absence of alkalies tiny cups with handles made of fused silica are convenient, Fig. 135; or tiny porcelain casseroles can be used. All the apparatus illustrated are standard commercial forms and may be obtained from dealers in chemical apparatus. Small crucibles are occasionally useful, especially those corresponding to No. 9 and 10 Meissan porcelain. Since, however,

crucibles require a special support during ignitions casseroles will be found more convenient.

Grinding, Crushing, Mixing. — For grinding and crushing materials for analysis, the smallest available agate mortars are best. One not larger than 30 millimeters in diameter, Fig. 136,

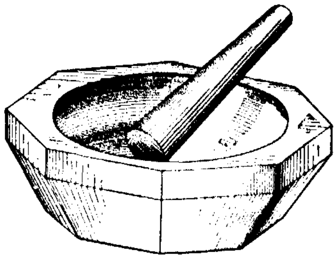

FIG. 136. Agate Mortar for Microchemical Analysis. (Full Size.)

should be selected. It must be carefully scrutinized with a lens to see that its inner surface is properly polished and is free from fissures, pits and scratches. A mortar made from a first quality piece of agate, if properly cared for, should last a lifetime.

CHAPTER XIII.

THE METHODS OF MICROCHEMICAL QUALITATIVE ANALYSIS.

In order that success may follow our efforts in the application of tests resulting in the production of characteristic microscopic crystals, it is essential that reagents be always applied in the best possible manner and in concentrations and under conditions such as will lead to the separation of a solid crystalline phase in a very short period of time. It is therefore necessary that we first ascertain the best method of procedure for each particular reagent. Most of the failures to obtain satisfactory results when attempting microchemical reactions are due to a lack of appreciation of the importance of this fact. Manuals of microchemical analysis usually neglect to state definitely the best manner of adding a reagent to a drop to be tested, assuming that the investigator will ascertain for himself the conditions which will yield him products most easily identified.

Under similar conditions as to concentration, acidity and manner of reagent application, the crystalline phase will not only almost invariably separate with the same habit, but the crystals will usually develop to the same size and will lie upon the object slide in each experiment in the same positions with respect to faces.

The following methods for performing microchemical reactions involve different manipulations and can be considered as typical procedures, each applicable to the detection of a number of different elements or compounds. The student should perform them until he is sufficiently proficient to invariably obtain an unequivocal test and one yielding each time similar crystals of a similar size. The more insoluble the compound, the more rapidly the crystals will separate and the smaller they will be.

For convenience for future reference these methods are here numbered and described in detail.

I. A drop of a solution of the reagent is allowed to flow into a drop of the solution of the material to be tested.

This method of applying the reagent is more often employed than any other, and is generally far preferable to the addition of a drop of reagent directly to the solution to be tested.

A perfectly clean object slide is required. Upon it near a corner place a small drop of the solution of the material to be tested. This drop should be spread out until it attains a diameter of approximately 5 millimeters and a depth of not over half a millimeter. A drop of the reagent of the same diameter but about twice the depth is next placed adjacent to the first drop at a distance of 2 to 3 millimeters. The concentration of the reagent drop should usually be slightly greater than that of the substance being tested. By means of a platinum wire or drawn-out glass rod, a tiny channel is made to flow from the reagent into the test drop, the object slide being tipped very slightly to facilitate the flow, but under no condition should the two drops merge completely.

Having a higher concentration in the reagent drop usually leads to a flow of this liquid at a lower level and therefore close to the object slide because of a slightly greater density than that of the solution of the substance. Crystals thus tend to form upon the slide instead of floating about in the liquid. The more perfect crystal faces are on the upper side, or, in other words, that side most easily studied by means of the microscope. Crystals which float about usually grow downwards from the upper surface of the test drop and therefore have the well-developed faces on their under side, which must remain more or less invisible.

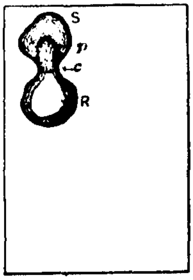

FIG. 137.

The maximum sizes of drops are shown in the diagram, Fig. 137. The reagent drop R has been made to flow into the drop to be tested S through a tiny channel *c*. The crystalline phase constituting the identity test separates at *p*.

EXPERIMENTS.

a. Addition of Chloroplatinic Acid (platinum chloride) to a solution of a potassium salt (KCl). Application: testing for K, NH_4, Rb, Cs, Na, many organic bases, etc.

Repeat the experiment, using a fragment of CsCl in a drop of the same size as that of the potassium salt just employed. Note the instantaneous formation of a precipitate and that crystals are very much smaller. Repeat again, using a very dilute solution of CsCl. Next try a solution drop of KCl containing very little CsCl. Allow to evaporate spontaneously after the addition of the reagent, Cs separates first, then K.

b. Addition of Ammonium Mercuric Sulphocyanate to a dilute solution of a copper salt.

c. Addition of a solution of a Tartrate to a solution of $CaCl_2$ acidulated with $HC_2H_3O_2$.

II. The substance to be tested is added to a drop of the reagent. This method of applying tests is the one least often employed. It will prove successful in such reactions as require for the separation and characteristic development of the crystalline phase a constant addition of one component, in this case that to be tested for in small but almost uniform amount.

The fragment of material is added to the center of a shallow broad drop. Warming gently will accelerate the separation of crystals.

EXPERIMENTS.

a. To a drop of a solution of $Bi_2(SO_4)_3$ containing a *trace* of free HNO_3, add a fragment of K_2SO_4.

Applications — Testing for K, for Na, for Bi, etc.

III. A tiny fragment of the solid reagent is added to a drop of the solution of the substance to be tested.

This case is substantially similar to Method *II*, and is governed by the same general conditions. It will be found to be the safest procedure in nearly all reactions where the solid phase at first formed is soluble in excess of the reagent, for there will always be during an appreciable time (owing to the rather slow solution of the reagent) a zone in which the equilibrium is such that the solid phase can exist. Thus the fragment of reagent will be surrounded by a clear space or ring, at the outer edge of which the solid

crystalline phase will easily be distinguished under the microscope. If the fragment of reagent added is too large, the clear ring rapidly increases in diameter as the reagent dissolves, and the solid phase is correspondingly rapidly forced toward the circumference of the test drop and eventually disappears completely. The test drop should be somewhat deeper than usual and should cover a relatively small area.

Reactions involving no re-solution of the crystals first separating require no such careful attention to equilibrium conditions, nor do they necessitate such constant observation under the microscope in order that the progress of the reaction may be followed. In this class fall the precipitations of one metal by another metal which is more electropositive. If, for example, we make use of the electrochemical series of Wilsmore-Ostwald,[1] it is found that the metallic elements are arranged thus:

$$+ \leftarrow \text{Mg, Al, Mn, Zn, Cd, Fe, Tl, Co, Ni, Sn, Pb,}$$
$$\text{(H), Cu, As, Bi, Sb, Hg, Ag, Pd, Pt, Au,} \rightarrow -.$$

Theoretically each element in this series is able to replace the elements below it in the series which are less electropositive. Since in many instances the metal displaced will separate in characteristic crystalline form, the addition of a tiny piece of Mg or of Al to a very slightly acidified drop may be made to yield a beautiful test for metals farther along in the series. This type of reaction is also of great value in effecting separations prior to the application of identity tests, or in the separation of elements which may interfere with future testing.

A knowledge of the electrochemical series is absolutely essential in all analyses of alloys where tiny fragments are not completely dissolved since there will be solution of one or more components and the precipitation of others upon the surface of the undissolved material. Furthermore, a study of the above series will reveal at once the fact that the addition to a test drop of a reagent with reducing properties will in all likelihood be followed by the partial precipitation of any metals present which fall in the electronegative end of the series.

[1] Zeit. phys. Chem., **36** (1901) 92.

III A. A tiny drop of the reagent is added directly to the test drop at its center.

This procedure is effective in all cases where the crystalline phase, which is wished, is not too slowly formed, has great crystallizing powers and forms a large molecule. It may be said, that, in a general way, the addition of a drop of the reagent directly to the drop to be tested is applicable to practically all microchemical reactions. But in many special cases the crystals separating are not as characteristic nor as constant in their habit as in other methods, nor does the reaction take place with sufficient rapidity.

The direct addition of the reagent is also practiced when a heavy agglutinated precipitate results, which must subsequently be freed from its supernatant liquid and then recrystallized.

The most frequent cases where reagent drops are added are in acidification, alkalinization, neutralization; and in the addition of some reagent whose purpose is to mitigate the deleterious action of some compound present, as, for example, the addition of sodium or ammonium acetate to prevent a free mineral acid from interfering with a test. Usually, however, a fragment of the solid acetate is added rather than a drop of solution. Or we may add a drop of glycerine solution to retard the formation of certain crystals.

EXPERIMENTS.

a. To a drop of a dilute solution of $HgCl_2$ add a fragment of KI. Note the kind of crystals formed and their position with respect to the fragment of KI. After the fragment of KI has dissolved leaving a clear area, add to its center a tiny fragment of $CuSO_4$; the HgI_2 which has dissolved will be reprecipitated.

b. To a drop of a very dilute solution of $HAuCl_4$ (chloroauric acid) add a tiny fragment of $TlNO_3$. In this case the characteristic crystals consisting of $TlAuCl_4 \cdot 5\,H_2O$ (?) form upon the fragments of the reagent.

c. To a drop of $Pb(NO_3)_2$ solution add a tiny drop of a dilute solution of $CuSO_4$. Stir. Add a fragment of $Na(C_2H_3O_2)$, stir until almost dissolved. Now add a fragment of KNO_2 and follow with a trace of dilute $HC_2H_3O_2$. Tiny black cubes of the triple salt $2\,(KNO_2) \cdot Cu(NO_2)_2 \cdot Pb(NO_2)_2$ separate.

d. To a drop of a solution of $Pb(NO_3)_2$ add a tiny fragment of metallic magnesium. Try in like manner a number of elements in the electrochemical series.

IV. The reagent solution is drawn in a narrow channel across a dry film obtained by evaporating to dryness a solution of the substance to be tested.

Reactions requiring a nice adjustment of concentration or leading to the formation of moderately soluble compounds, thus entailing a considerable loss of time waiting for the formation of crystals, if much liquid were present, are always best performed on the dry residue. Residues for such reactions should consist of thin, uniform films of material and are to be obtained only when scrupulously clean slides are employed, when only a small amount of the substance is present and when care is taken to avoid heating too hot during the evaporation. Gentle heating and blowing on the warm drop will give the best results. Heating should be done at the corner of the object slide over the tiny flame of the micro-burner, tipping the object slide so as to cause the drop to flow toward the corner and holding above the flame in such a position that the tip of the flame is nearer the middle of the slide. This prevents the liquid from creeping and from spreading.

It is usually advisable to examine this film under a low power to learn whether it is thin and uniform in character.

In cases where a ridge of the solid material tends to form around the edge, as will be the case if too much substance has been used, it is advisable to remove this ridge by means of the platinum spatula (Fig. 68), using it shovel-wise. The reagent is dissolved in a tiny drop of water placed just beside the dried test drop, and is then drawn across the latter with a quick stroke of a glass rod with drawn-out end, care being taken to avoid rubbing the slide in leading the reagent across. To facilitate the flow, the slide should be inclined a trifle in the direction the liquid is being drawn. The solution should never spread over the entire film of substance, but should remain as a streak of liquid dividing the dry spot in half. When the liquid completely covers the residue, it is usually due to one or more of several causes: too thick a film; a slide that is not clean; heating after the residue was dry and so detaching it from the glass; too much reagent, or the presence of excessively soluble compounds or those which refuse to adhere to the glass.

EXPERIMENTS.

a. Obtain a thin uniform film of NaCl as described above.

b. Near the residue (2 to 3 millimeters) place a drop of distilled water; acidify the drop by touching with a drawn-out glass rod which has been dipped in dilute $HC_2H_3O_2$; introduce a tiny fragment of $UO_2(C_2H_3O_2)_2$. Warm the drop gently to facilitate solution, but do not evaporate. Cool. By a single, rapid stroke of a glass rod or platinum wire, draw a streak or channel of the reagent across the center of the dry material. Place the preparation upon the stage of the microscope and search the edges of the streak of liquid at once. Tiny faintly yellow triangular and tetrahedral crystals of $NaC_2H_3O_2 \cdot UO_2(C_2H_3O_2)_2$ will be seen.

Analytical applications — Na, Mg, U, acetates.

V. Upon failure to obtain a decisive test owing to the unsatisfactory separation of crystals, the delicacy of the reaction can be increased through the addition of another reagent which will produce a less soluble salt of the same nature.

The chemical reactions involved in the practical application of this method of increasing the delicacy of microchemical identity-tests are among the most interesting and instructive with which we have to deal. To properly apply and interpret them or to devise new tests to meet special conditions requires, in inorganic chemistry, a good working knowledge of the Periodic System of Mendelejeff: while in the case of reactions in the field of organic chemistry success can only follow a profound knowledge of the chemical and physical properties of the compounds to be studied.

Considering the method only from the viewpoint of inorganic analysis, the delicacy of a test can be increased by introducing into the test drop, in which no separation of a crystalline phase has taken place, a salt whose base will form a less soluble compound than that originally present. For example, suppose a test for the presence of chlorides is being made by means of platinum sulphate and a salt of potassium; with much chlorine, potassium chloroplatinate will separate, but if we obtain no crystals, we may add a little rubidium sulphate to the drop. Should this yield no result, it can be followed by a little cesium sulphate and finally carried to the limit by the introduction of a thallous salt. With the potassium salt the limit of the test is 7^{-4} milligrams of chlorine, but with thallium 4^{-6} milligrams (Beh-

rens). That is to say, that while we may obtain proof of the presence of an exceedingly minute amount of chlorine through the separation of crystals of thallous chloroplatinate, approximately one hundred times as much chlorine must be present in order that it may be revealed as potassium chloroplatinate.

This plan of producing a less soluble salt is, in general, to be preferred to that of causing the separation of a solid phase by forcing back the dissociation, by means of strong acids, salting-out, or other similar processes, since well-formed crystals result in the first case, but abnormal, atypical salts are apt to appear in the other cases.

EXPERIMENTS.

Repeat Experiment *IIIc*, page 254, gradually reducing the concentrations until no triple salt separates, then add a fragment of CsCl; the triple nitrite of Cs, Cu and Pb will appear. In a new preparation carry the dilution a little farther, so that the Cs salt does not appear at once. Add a fragment of $TlNO_3$. The delicacy of the reaction will be approximately K:Tl as 3:1.

VI. The reaction can be hastened and the delicacy of the test increased by exposure to alcohol vapors.

It was stated under Method *V*, that it is rarely desirable to employ a reagent that will force back the dissociation; the reasons being that the addition of such a reagent causes a too rapid separation of a solid phase and there is a tendency towards the production of malformed, skeleton or exceedingly tiny crystals. When, however, the separation of a solid phase is accelerated by the gradual absorption of a vapor in the test drop, thus reducing the solubility by forcing back the dissociation very slowly, it requires only a little care to assure the separation of characteristic, well-formed crystals.

Alcohol is exceptionally well fitted for use in all cases where a crystalline compound is less soluble in alcohol than in water.

One of two methods will be found convenient. Place near the test drop a small piece of filter paper. Saturate the paper with a drop or two of alcohol, carefully avoiding the addition of more than the paper will absorb. Cover the drop and paper with a watch glass (Behrens); or place a piece of paper at the bottom

of a crucible, preferably a tiny glass crucible as described on page 245, or in a small beaker. Saturate with alcohol and invert over the test drop. Owing to the difference in the vapor tensions, alcohol will be absorbed by the aqueous solution and the crystalline phase will rapidly separate. Only a *very short* exposure is necessary.

When dealing with very thin films or tiny drops where there is a tendency to evaporate to dryness, exposure to alcohol vapors is especially valuable.

EXPERIMENTS.

a. Prepare a large drop of a moderately concentrated solution of $Pb(NO_3)_2$. From this large drop take two small ones. Allow one of them to evaporate spontaneously. Treat the other with alcohol vapor as described above. Note the difference in time required for the appearance of crystals.

b. To a dilute solution of a calcium salt add a drop of dilute H_2SO_4 by Method *I*, page 251. Sheaves, bundles and isolated acicular crystals of $CaSO_4 \cdot 2\,H_2O$ will separate. Prepare a solution of the calcium salt so dilute that no $CaSO_4$ appears after standing two or three minutes. Expose to alcohol vapors and note that characteristic crystals are soon visible.

VII. The reagent is dissolved in alcohol and a drop of the alcoholic solution is employed as in Method I.

Although we are here dealing with a mode of applying the reagent already discussed, alcoholic solutions need special mention because of the care required in their application. The remarks which follow are equally applicable to any other solvents or reagents of lower boiling point than water or of different surface tensions.

There is always a marked tendency of the alcoholic reagent to spread over the whole object slide, carrying with it the drop of solution to be tested, or breaking the latter up into so many droplets as to render reliable observations impossible. Not infrequently considerable skill is essential to prevent this dissipation of material.

When an alcoholic reagent must be added to a reagent drop, always have the drop at the corner of the slide, and tip the slide slightly before the alcohol solution is applied to the glass near the drop; as the reagent leaves the rod or pipette increase the

inclination of the slide at once so as to cause the reagent to flow toward the material to be tested. Counteract any tendency of the reagent to creep up by immediately increasing the inclination to an almost vertical position.

Often the preparation cannot be laid flat upon the stage because of the instant spreading of the alcoholic solution. In such an event, the corner of the object slide holding the liquid is inserted in the stage opening and may be held in place by another slide placed upon the stage, carrying a piece of "plasticine" against which the inclined slide is pressed. The preparation can then be examined with a low power, focusing each different area as it is brought into the field by means of the stage centering screws.

Because of the difficulties involved in the study of inclined preparations it is always better to first evaporate to dryness the drop of material to be tested so as to obtain a broad thin film (see Method *IV*) and use a reagent solution made with as dilute alcohol as will yield the proper conditions required in the test.

EXPERIMENTS.

a. Obtain a thin film of KCl at the corner of an object slide. Place near by a drop of an alcoholic solution of freshly prepared sodium bismuth thiosulphate.[1] Tip the slide slightly and draw the reagent across the dry film.

Yellow monoclinic[2] crystals of potassium bismuth thiosulphate separate. The salt is believed to have the formula

$$3\,(K_2S_2O_3)\cdot Bi_2(S_2O_3)_3\cdot 2\,H_2O.$$

It is readily soluble in water, almost insoluble in alcohol.

[1] The reagent is prepared as follows: Place in a small watch glass (25 mm.) a small drop of dilute hydrochloric acid; add repeatedly minute amounts of basic bismuth nitrate, warming gently from time to time and stirring thoroughly, until a trace of the basic nitrate remains undissolved; now add a bare trace of hydrochloric acid; just sufficient to dissolve the little residue of bismuth salt, but no more; then add to the preparation a tiny drop of water. A permanent precipitate of bismuthyl chloride should result. If the first drop of water does not produce a permanent precipitate, another drop must be added. To this latter turbid solution a saturated solution of sodium thiosulphate is carefully added, with constant stirring, a tiny drop at a time, as long as any of the precipitate remains undissolved. An excess of sodium thiosulphate is to be avoided. A perfectly clear, faintly yellowish solution should result. To this clear liquid add alcohol (95 per cent) drop-wise, until a permanent turbidity results, which is in turn cleared up by the addition of a single drop of water.

[2] Hüysse, Zeit. anal. Chem., **39** (1900), 9.

b. Prepare a film of KCl. Draw across it an alcoholic solution of picric acid $C_6H_2(NO_2)_3OH$. Potassium picrate $C_6H_2(NO_2)_3OK$ is obtained in long acicular prisms of the orthorhombic system. Try in like manner, Na, NH_4 and Cs chlorides. Try with Na_2CO_3.

VIII. The reagent is incorporated into a fiber of silk, cotton, wool, or in a filament of guncotton and the prepared fiber dipped into the drop of solution to be tested.

The development of the methods for testing by means of textile fibers into which are incorporated the reagents to be employed, is due to Emich [1] and to Donau.[2]

That variety of fiber is chosen which has the highest adsorptive power for the specific reagent to be used, as, for example, silk for adsorbing litmus; wool or silk for turmeric; silk or cotton for gold; guncotton for adsorbing zinc sulphide, etc.

Two methods of applying the reagent fiber to the test drop are in vogue; one consists in laying the fiber across the drop of solution so that about two-thirds of its length will be outside the drop. The liquid is drawn by the capillarity of the fiber so that it gradually flows over its whole length. The second method consists in rolling a bit of beeswax between the fingers until a tiny slender cone is obtained about 10 millimeters long by 2 or 3 millimeters in diameter. One end of the reagent fiber is attached to the apex of the wax cone and the base of the cone is gently pressed against an object slide. A very minute rounded drop of the solution to be tested is placed upon the slide about 5 millimeters away from the base of the cone; the cone is then bent over until the free end of the fiber dips into the liquid. The preparation is next placed upon the stage of the microscope and the instrument focused upon the fiber just above the drop. Through capillarity the liquid is drawn upon the fiber and the reaction resulting is easily recognized.

[1] Emich, Monats., **22** (1901), 670; **23** (1902), 76; Ann., **351** (1907), 426.

[2] Donau, Monats., **25** (1904), 545; Ann., **351** (1907), 432.

APPLICATIONS OF THIS METHOD.

Testing for acidity or alkalinity . . . . . . Litmus-silk
Differentiating between strong mineral
acids and organic acids . . . . Congo-red-silk
Testing for boric acid, borates . . . . Turmeric-silk
Group reagent for the heavy metals . . . . Guncotton-zinc-sulphide
Test for gold . . . . Adsorption upon silk, reduction with stannous chloride

For the methods for preparing the fibers, see page 271.

EXPERIMENTS.

a. Test a very dilute drop of an acidulated solution with blue litmus-silk.

b. Test a dilute drop of alkaline solution with red litmus-silk.

c. Place a drop of a dilute solution of borax upon an object slide, acidulate with dilute HCl. Dip into the drop from a wax cone a fiber of turmeric-wool. Allow to evaporate spontaneously to dryness. Examine the fiber under the microscope. It should have a brownish color. Lay the fiber upon a slide and moisten with a 10 to 15 per cent solution of NaOH. If borates were present the fiber turns a bluish or lavender color.

d. Into a tiny drop of a solution containing Au, lay a fiber of purified raw silk, warm gently until evaporated to dryness; carefully avoid too high a temperature. The fiber turns yellow or red. Treat with a dilute solution of $SnCl_2$ containing a little tannic acid. A purple color results, due to the precipitation of metallic gold. The beautiful red color of the silk fiber before the reducing agent is added is due to colloidal gold; the agglutination of the colloidal particles by the $SnCl_2$ gives rise to larger particles which appear purple.

IX. The delicacy of the test is increased by taking advantage of adsorption phenomena, or the test itself depends upon the adsorptive properties of a compound.

Although reactions of this type are those most frequently employed in the differentiation of structures, tissues, cells and cell contents in biology, histology and pathology, through the use of differentiating stains or dyes, their applications in the chemical laboratory to the common problems of qualitative analysis are limited.

The basis for selecting a reaction involving adsorption phenomena or solid solution is that the resulting reaction shall confer upon a practically colorless body a color of sufficient intensity to render it more easily discernible. Whenever, therefore, stain-

ing or coloring can be quickly and simply accomplished, advantage should at once be taken of the fact.

As examples of qualitative tests which may be considered as falling under this method, the following may be cited:

In testing for perchlorates, the addition of a permanganate will yield *colored* perchlorate crystals.

Iodine and bromine are revealed by their coloring starch granules, or the presence of a compound setting free iodine from an iodide or from an iodate is ascertained by starch. Or, on the other hand, starch is easily differentiated from other substances by staining with an iodine solution.

Most oil or fat globules may be stained by alkanin.

Fullers earth affords a simple means of distinguishing between vegetable and aniline dyes and in a few cases between certain aniline dyes themselves.

In the microchemical examinations of rock sections, aluminum hydroxide can be stained with congo red and gelatinous silica with malachite green — tests which may be employed in testing for "weathering," etc.

EXPERIMENTS.

a. Next to a drop of a dilute solution of $HClO_4$ or NH_4ClO_4, place a drop of RbCl solution (or KCl, if no Rb is obtainable). Cause the Rb to flow into the perchlorate (Method *I*). In a few seconds colorless, characteristic crystals of $RbClO_4$ separate. Place a drop of dilute $KMnO_4$ next to the preparation and cause it to flow into it. The crystals of $RbClO_4$ will become colored pink. The resulting compound is a solid solution (isomorphous mixture) of the permanganate in the perchlorate, due to adsorption.

b. To a drop of a dilute KI solution add a few granules of potato or arrow-root starch. Stir. Examine under the microscope. Add at the center a very minute fragment of pure KNO_2 or $NaNO_2$. Examine again. The starch granules should appear at the most only very slightly colored. Add a trace of very dilute $HC_2H_3O_2$ or H_2SO_4. The starch granules turn blue or purple, due to adsorption of liberated iodine.

Repeat the experiment, substituting a bromide for the iodide and $(NH_4)_2S_2O_8$ for the KNO_2

X. The reagent dissolved in a volatile solvent is spread in a film upon an object slide in such a manner as to yield a coating or varnish non-crystalline in character, and across this prepared surface a solution of the unknown material is drawn.

Behrens[1] has successfully used this procedure in testing for the alkaloid quinine. Although no other practical application of this method of testing has yet been made, its possibilities in organic analysis are great, and the principle upon which the test is based is exceedingly interesting, namely, inducing crystallization in an amorphous mass through the presence of a mother substance dissolved in a suitable solvent.

EXPERIMENTS.

a. Dissolve a little quinine in dilute H_2SO_4, add to the drop of solution a fragment of KI, stir until dissolved, then add a fragment of KNO_2. Decant from the brown amorphous mass, wash the precipitate once with water and dissolve it in C_2H_5OH. The alcoholic solution is flowed over a clean *previously warmed* slide so as to cover it with a thin homogeneous varnish. Examine under the microscope and make certain there are no *pleochroic* crystals.

Dissolve a little quinine sulphate in *dilute* $HC_2H_3O_2$. Draw a narrow streak of this solution across the varnished surface. Immediately highly pleochroic crystals of iodo-quinine sulphate (Herapathit) will separate.

The student should satisfy himself that this is actually an excellent test for quinine, although quinine was employed in making the reagent. Try, for example, pure cinchonine, cinchonamine, etc., in $HC_2H_3O_2$ solution; no Herapathit crystals will be obtained.

XI. Testing for the evolution of gas from a substance when treated with a reagent.

Dissolve in hot freshly drawn distilled water such an amount of pure gelatin (one or two square millimeters of sheet gelatin) that the solution just jells on cooling. It is essential that this jelly shall not possess too high a setting power nor yet be so thin that considerable time is required for it to set after melting.

The substance to be tested, if a solution, should be evaporated to dryness in a thin film, or if a solid, very finely powdered or spread out in a thin uniform layer. Upon the dry residue a small drop of the melted gelatin is caused to fall, is quickly spread in a thin layer, and the slide allowed to stand upon a cool metal surface until the gelatin sets. The preparation is then placed upon the stage of the microscope and is focused. Next to the jelly drop is placed the reagent whose effect is to be tested,

[1] Anleitung, z. mikro. Anal. v. wichtigsten organ. Verbind. Heft III, 92.

and by means of a glass rod, the reagent drop is caused to touch the jelly mass. The reagent slowly penetrating into the jelly attacks the substance. If a gas of relatively low solubility is generated tiny gas bubbles will appear in the gelatin.

Applied as above described the test has a somewhat wider range of usefulness than if the reagent (acid) is dissolved in the gelatin, as suggested by Behrens.

In the event that the gas set free by the reagent is very soluble in water, no gas bubbles will appear; in such an event the gelatin may be made the carrier of some reagent upon which the gas will react and be thus made to reveal its presence.

EXPERIMENTS.

a. Evaporate a drop of Na_2CO_3 solution. Cover with gelatin, test with HCl.
b. Place a little $CaCO_3$ on an object slide, cover and test as above.
c. Test a little zinc dust in like manner.
d. Test a cyanate in like manner, using H_2SO_4.

XII. An amorphous precipitate is formed by the reagent and requires special treatment to induce crystallization.

It has already been pointed out that in microchemical qualitative analysis an amorphous precipitate is the least desirable form in which a substance may be separated for identification. Nevertheless, it often happens that such precipitates are obtained either accidentally or when it is more expedient to thus remove a substance in order to prevent it from interfering in subsequent testing for other substances.

In qualitative analysis by means of microscopic methods two classes of amorphous precipitates are met with: (*a*) Those which require solution in a special solvent from which a crystalline compound eventually separates, and (*b*) those in which crystallization can be induced by inoculation with a *trace* of the same compound in a crystalline condition.

Special mention is here made of the treatment of amorphous precipitates because in a number of instances treatment with hot concentrated sulphuric or hydrochloric acids must be resorted to in order to obtain recognizable compounds.

When a precipitate is to be recrystallized from hot concentrated sulphuric acid, it must be placed or formed *at the corner* of the object slide and any supernatant aqueous solution decanted. A moderate sized drop of the concentrated acid is then placed upon the precipitate and the slide immediately *inclined* at an angle of at least 30 degrees, to prevent the acid from spreading. Heat from a tiny flame is then applied to the object slide just below the upper edge of the drop, and as the acid fumes off the flame is brought nearer and nearer to the corner. As soon as it appears that sufficient material has passed into solution, the preparation is removed from the flame and allowed to cool for a few seconds, while still held in an inclined position. The inclined slide is then tipped so as to cause a slow flow to the adjacent corner (see page 232, Decantation), thus decanting the clear acid from the remaining insoluble precipitate, the channel of flow is cut off with filter paper and the slide inclined until it is almost vertical, thus causing the clear drop of acid to gather at the very corner of the slide. This corner is then touched to a clean slide and through a touch with a glass rod or platinum wire the drop is made to flow from the inclined slide to the horizontal one. A small clear drop is thus obtained.

This system of attack can be employed in all cases involving re-solution in strong reagents. Where constituents dissolving from the glass slide are objectionable platinum foil can be employed, eventually transferring as above to a glass slide.

The second case mentioned arises most often in the analysis of organic compounds, as, for example, in the separation of a free base from its salts by means of an alkali. Although the amorphous appearing material will eventually crystallize spontaneously if given sufficient time, it is usually desirable to hasten the formation of typical crystals. This can be accomplished by taking upon a platinum needle the most minute fragment possible from a portion of the pure base believed to be present and drawing it through the amorphous mass, crushing it at the same time. Crystallization of the amorphous material is almost always immediately started and proceeds with great rapidity.

EXPERIMENTS.

a. Add (by Method *I*) to a drop of $BaCl_2$ solution a drop of dilute H_2SO_4, evaporate to cause agglutination of the $BaSO_4$; add a drop of water, warm gently. Decant. Recrystallize the residue from hot concentrated H_2SO_4 as described above. Cool and breathe repeatedly upon the drop. Study the crystals as they form.

b. Repeat, using $Pb(NO_3)_2$ instead of $BaCl_2$.

c. Precipitate AgCl from a solution of $AgNO_3$. Recrystallize from concentrated HCl.

XIII. The material to be analyzed is exposed to the action of vapors or gases, or a reagent is exposed to vapors or gases resulting from the action of some compound upon the material to be tested.

Oxidation of loosely bound sulphur to sulphate can usually be accomplished by placing a drop of bromine in a watch glass or crucible (use the apparatus, Fig. 131, page 246), inverting the drop of a solution of the substance to be tested over the bromine, warming *gently in the hood* and allowing the preparation to stand for five or ten minutes in contact with the bromine vapors.

In many instances, the substance need not even be in solution, but can be merely in suspension, provided it is in a finely divided condition. No specific directions are necessary other than the caution that the inverted drop must never be so large that there is danger of its dropping off the object slide.

Never perform oxidations with bromine save in the hood at a distance from all microscopes.

After exposure to the oxidizing vapors, the slide is removed, turned right side up, the excess of bromine expelled *in the hood* by gentle warming and the remaining drop tested for the presence of sulphates.

In testing for the presence of a gas, as, for example, hydrocyanic acid, the reagent (in this case silver nitrate solution) may be inverted over the container in which the gas is liberated, — watch glass, crucible or test tube, — or in testing for arsenic through the generation of arsine, the gases may be conducted through a tiny capillary tube containing a minute crystal of silver nitrate. The distilling tube, Fig. 133, page 248, serves as an excellent generator for applying this modification of the Gutzeit test for arsenic (see Figs. 138 and 139).

In a similar manner traces of moisture (or water of hydration in tiny crystals) can easily be recognized by placing a *minute* quantity of dry powdered fuchsine in a capillary tube and causing the moist air to pass over it by heating. The change from the greenish black powder to crimson droplets is very striking.

Numerous other examples might be given.

EXPERIMENTS.

a. Place in the crucible of the apparatus, Fig. 130, two or three fibers of asbestos, drop upon them a single drop of bromine (in the hood). Invert over the crucible a drop of a solution of a sulphide. Lower the clamp and warm *gently in the hood,* until the crucible is filled with bromine vapors. Allow to stand for about five minutes. During this period test a portion of the unoxidized material for sulphates as below. Lift off the object slide from the crucible, turn it drop side up and evaporate to dryness; add a drop of water to the cool residue, then a tiny drop of HNO_3. Decant if not clear, and finally test for sulphates by adding a drop of $Ca(C_2H_3O_2)_2$. (Method *I.*) $CaSO_4 \cdot 2H_2O$ separates in the form of radiating tufts or X's of monoclinic needles or thin prisms.

b. Place in the glass crucible a dilute solution of KCN. Cover it with an object slide, carrying a small drop of $AgNO_3$ upon its under side. Raise the slide just enough to permit dropping in several small grains of primary sodium carbonate ($HNaCO_3$). Cover tightly at once and allow to stand for five or ten minutes. If, after this interval, no cloudiness is visible, warm the crucible gently. Remove the slide and examine it with a ¼ inch or 8 millimeter objective. AgCN appears as small colorless prisms with obliquely truncated ends.

XIV. Methods involving fusing the material in a bead of borax, microcosmic salt or other medium.

Some of the very earliest attempts to employ the microscope for the detection of minute amounts of material were made in conjunction with the blowpipe analysis of minerals. It was found that many substances yielded characteristic crystals when fused in borax beads before the blowpipe at high temperatures.

Although of questionable usefulness in systematic analysis, this method is of sufficient interest to the student to be well worthy of trial and study.[1]

To obtain a loop wind a platinum wire twice around a glass

[1] See Sorby, Chem. News, **19** (1869), 124; Wunder, J. f. prak. Chem., **109** (1870), 452; Emerson, Proc. Amer. Acad. Arts and Sci., **6**, 476.

rod 2 to 4 millimeters in diameter. Heat the wire red hot, dip into borax (or other substance) and heat until a clear glassy bead is obtained of from 1 to 2 millimeters thick. Cool. Examine under the microscope, using a low power to assure the absence of crystals. Heat and touch to the powdered material to be studied. Then very carefully heat the preparation in the flame of a Bunsen burner until the borax or phosphorus salt bead just begins to melt. Avoid heating to redness. Cool and examine with a 16-millimeter objective. Heat again, and again place under the microscope, thus following any changes which may take place. Should a blast lamp be employed for the heating care must be observed to avoid too large and too hot a flame.

This method can be made to yield good results in testing for calcium and magnesium and also for silicon, zirconium, titanium and molybdenum. Colored bead reactions are also obtainable, as for example in testing for Co, Ni, Cr, Mn, etc.

The general principle of the method is, however, much broader in its scope since it comprehends all cases where a crystalline phase will separate from a transparent molten mass which solidifies upon cooling.

XV. Testing with Hydrofluoric Acid or Silicofluorides.

These reagents are applied in one of the manners already described, usually by Methods *I*, *III*, or *III A*.

Specific comment is necessary, however, because of the impossibility of employing ordinary glass object slides and because of the great danger of permanently damaging the objectives through the corrosive action of hydrofluoric acid vapors.

Before undertaking any tests in which hydrofluoric acid vapors will probably be present, remove all objectives from the nosepiece save the lowest power, and place all microscope accessories at such a distance from the preparation as to render them safe. Take a small cover glass, carefully add a tiny drop of pure glycerine to its center and bring the drop in contact with the lower lens of the objective and press gently until the drop spreads out into a thin film, holding the cover glass in place. This is done to

reduce the danger of corrosion of the lens by the acid vapor. If a considerable period of time is occupied in a series of tests, the cover glass should be removed at intervals and the objective thoroughly wiped off and cleaned with lens paper moistened with water, dried and a new cover glass and glycerine applied.

It is always preferable to have a cheap objective set aside, especially for hydrofluoric acid work, so as not to run the risk of ruining an expensive lens.

For supports upon which to perform the tests, celluloid slips will be found convenient. The chief difficulty arises when gently heating the preparation, to cause development of the crystal forms, since nitrocellulose is very inflammable. Slips of cellulose acetate are therefore far preferable but are at present not commercially obtainable.

Glass object slides coated with a film of "zapon" varnish, allowed to dry, and a second coat applied, yield good results when carefully prepared, but require as great care in heating as celluloid slips.

A better device consists in coating glass object slides with "Bakelite," and heating in an oven to the temperature directed by the Bakelite Company for the particular grade of "Bakelite" used. Slides thus coated can be warmed without danger and yield good results.

Whenever a critical case arises involving the detection of minute amounts of silica, titanium or zirconium, etc., it is best to have recourse to cellulose nitrate or acetate slips so as to preclude the possibility of error due to pores or fissures in the varnished surface of a glass slide.

Decompositions by means of hydrofluoric acid are best performed upon small pieces of platinum foil or in the tiny platinum spoons shown in Fig. 134, page 248. Subsequently the material can be transferred to cellulose slips or varnished slides for study.

In selecting slips made from cellulose compounds, only such pieces should be chosen as are not badly scratched and grooved, and which are as nearly colorless as possible. Deep yellow slips are not suitable since in testing for sodium or for silica we depend

for identification upon the faint pink tint of sodium silicofluoride as well as upon its crystal form. The same caution holds good for "Bakelite" varnish — obtain one not highly colored if possible and coat the glass slide with only a thin film. In coating glass slides with any protective varnish always carry the coating over the edges.

Glass slides varnished with Canada balsam dissolved in chloroform or xylene and subsequently dried in an oven at a slightly higher temperature than that of the room can also be used, but are not so convenient as the methods given above.

Rathgen has recently called attention to an entirely different manner of employing fluorides in microchemical reactions. He has shown [1] that a very sensitive and characteristic reaction for aluminum may be obtained by mixing the finely powdered material with several times its weight of ammonium fluoride in a platinum cup or tiny platinum crucible, to which is then added four or five drops of sulphuric acid and the whole heated gently until all volatile fluorine compounds have been expelled; the heat is next slowly raised to drive off the sulphuric acid and the cup finally brought for a moment to a low red. After cooling, the residue is transferred to an object slide by means of a drop of water and a tiny brush. Aluminum gives tiny six-sided crystals and hexagonal plates.

EXPERIMENTS.

Experiments involving the use of fluorides will be found outlined in Chapter XIV under the elements Sodium, Barium.

PREPARATION OF SPECIAL REAGENTS.

Ammonium Mercuric Sulphocyanate. — To a concentrated solution of mercuric nitrate add a concentrated solution of ammonium sulphocyanate as long as a precipitate is produced. Filter; wash thoroughly the mercuric sulphocyanate obtained and transfer while wet to a beaker, and dissolve it by adding slowly drop by drop a saturated solution of ammonium sulpho-

[1] Zeit. anal. Chem., **53** (1914), 33.

cyanate; as soon as the precipitate has dissolved add a *very slight excess* of the ammonium salt. Too much ammonium sulphocyanate decreases the sensitiveness of the reagent.

Litmus-Silk-Fibers.[1] — Boil a little raw silk with water, decant and wash. Pour over the silk fibers a solution of pure litmus.[2] Evaporate on the water bath to small bulk, but not to dryness. Wash the colored silk with water and dry by pressing between filter paper and then allowing to stand in the air for a time.

For red-litmus-silk, treat with the weakest possible acetic acid and dry by pressing between filters just before using.

For blue-litmus-silk, treat with the weakest possible sodium hydroxide and dry between filters.

Turmeric-Silk-Fibers.[3] — Boil commercial turmeric root with twice its weight of alcohol until all the coloring matter is extracted. Filter and evaporate to dryness on the water bath. Dissolve the residue in an amount of dilute alcohol (to which a drop of sodium hydroxide has been added) equal to about half the weight of turmeric root taken. Place the fibers, previously boiled in water, in this solution and evaporate almost to dryness upon the water bath. Wash once with water, press between filter paper and treat with water acidulated with sulphuric acid. Press between filters, wash with water and dry.

Zinc-Sulphide-Fibers.[4] — Soak guncotton in a strong solution of zinc sulphate, decant the solution and pour upon the wet cotton a dilute solution of sodium sulphide. After standing a short time, decant, wash the fibers with water and dry them for use.

Congo-Red-Silk. — Prepare a strong solution of congo red, make it very slightly alkaline and heat it to boiling; while it is still hot stir in the coarse raw silk fibers and allow the preparation to stand for a short time. Remove the fibers, wash very thoroughly with distilled water, press between filter paper and

[1] Emich, Monats., **22** (1901), 670.
[2] Wartha, Zeit. anal. Chem., **15** (1876), 322.
[3] Donau, Ann., **351** (1907), 426.
[4] Donau, Ann., **351** (1907), 432.

dry for use. Cotton fibers may be employed instead of silk, but are not so good. Mineral acids, even when in exceedingly dilute solutions, turn the colored fibers blue. Dilute organic acids usually do not alter the color. Alkalies produce no change, but will cause a blue (acid) fiber to turn red.

CHAPTER XIV.

CHARACTERISTIC MICROCHEMICAL REACTIONS OF THE COMMON ELEMENTS WHEN IN SIMPLE MIXTURES.

The methods of applying reagents and of performing the necessary manipulations arising in qualitative analysis have already been discussed at length in Chapter XIII, as well as the application of the simple polarizing microscope to the differentiation of chemical compounds in Chapter VIII.

In the directions which follow it is assumed that the student is thoroughly familiar with these topics. As an aid to the recognition of common salts which may be met with, there has been given under each element the crystal system to which its common salts are to be referred. This has been done in the hope that the student will learn to employ the polarizing microscope and come to appreciate its many advantages as an invaluable aid and great saver of time and labor. In these tabulations the following abbreviations have been used: (I) Isometric; (H) Hexagonal; (T) Tetragonal; (O) Orthorhombic; (M) Monoclinic; (Tr) Triclinic; and the salts arranged in the order named.

SODIUM.

Crystal Forms and Optical Properties of Common Salts of Sodium.[1]

A. ISOTROPIC.

Isometric. — Chlorate.[2]

The alums (double sulphates of Na and Al, Fe, Cr) (I); chloride (I); bromide (I); iodide (I);[3] molybdate (I or O).

[1] In the following tabulations the data given have largely been obtained from Groth's Chemical Crystallography.

[2] $NaClO_3$ although belonging to the isometric system exhibits circular polarization in crystals. Its solution is inactive.

[3] NaI forms hydrates optically active.

B. ANISOTROPIC.

Hexagonal. — Nitrate (pseudo O); normal phosphate; potassium-sodium molybdate; silicofluoride.[1]

Tetragonal.

Orthorhombic. — Iodate; nitrite; potassium-sodium tartrate; normal tartrate; primary phosphate.

Monoclinic. — Acetate; secondary arsenate; borates, tetra and meta; carbonate; primary carbonate; chromate; ferrocyanide;[2] oxalate, ferric-sodium; secondary phosphate; ammonium-sodium acid phosphate; sulphate; primary sulphate; thiosulphate; zinc-sodium sulphate.

Triclinic. — Bichromate; bitartrate; primary oxalate.

DETECTION.

A. — By means of Uranyl Acetate.

Apply test by Method *IV*, page 255.

Sodium yields with uranyl acetate small faintly yellow tetrahedra, appearing black by transmitted light. The compound formed probably has the formula $NaC_2H_3O_2 \cdot UO_2(C_2H_3O_2)_2$. The crystals are isotropic belonging to the isometric system.

Potassium, rubidium, cesium and ammonium yield long needles or slender prisms of the tetragonal system of greater solubility than the sodium compound and therefore not appearing until the preparation has evaporated almost to complete dryness.

Because of the high solubility of ammonium uranyl acetate, Schoorl[3] has suggested its use for detecting sodium instead of simple uranyl acetate. The test thus made is more sensitive, but lacks the convenience of the method given above in that no

[1] Na_2SiF_6 is said to be pseudohexagonal.

[2] $Na_4Fe(CN)_6 \cdot 12\ H_2O$ is pseudotetragonal.

[3] Lenz u. Schoorl, Zeit. anal. Chem., **50** (1911), 263.

indication of the probable presence of K, Rb, Cs or NH_4, can be obtained at the same time Na is being searched for.

In the presence of magnesium there will be obtained in addition to the tetrahedra of the sodium double salt large monoclinic crystals of a triple salt

$$NaC_2H_3O_2 \cdot Mg(C_2H_3O_2)_2 \cdot 3\,(UO_2(C_2H_3O_2)_2) \cdot 9\,H_2O,$$

taking the form of rhombs or appearing to be octahedra, dodecahedra or having a more or less triangular outline with incurving sides. When, however, the amount of sodium is very small with reference to that of magnesium, only the triple salt will appear.

As might be expected any of the other elements in the magnesium group in the Periodic System, Gl, Zn, Cd, can replace Mg in the triple salt.

Precautions.

Too much free acid interferes with the test — a further reason for evaporation to dryness before applying the reagent.

Much magnesium gives rise to a film of salts so hygroscopic that a dry film cannot be obtained unless the salts are first converted into sulphates by evaporation with a little dilute sulphuric acid.

Members of the calcium group often cause trouble. If, therefore, an unsatisfactory test for sodium is obtained and subsequent testing reveals the presence of Ca, Sr or Ba, these elements should be removed by precipitation with sulphuric acid, the solution filtered or decanted from the precipitate and the filtrate evaporated to dryness on *platinum* (why ?) and again tested for sodium.

Any compounds present in the material to be tested which will yield an insoluble precipitate with uranyl acetate, as, for example, phosphates, will naturally seriously interfere with the test or may absolutely prevent the detection of Na. In such an event the amount of uranyl acetate employed must be slightly more than sufficient to satisfy all the PO_4 present and to unite with the sodium to form the double salt. Under these conditions this test becomes unsatisfactory as applied above since it

requires too much time. It is then better to flood the dry film with reagent, allow a few seconds to elapse for the establishment of equilibrium and decant the clear solution from the precipitate of uranyl phosphate. The decanted solution must then be allowed to evaporate spontaneously until crystallization sets in, or the evaporation may be hastened by gentle heating.

This test for sodium is also apt to prove unsatisfactory in the presence of much potassium. To remove the latter add perchloric acid in slight excess. Evaporate to dryness, moisten the residue with perchloric acid and again evaporate. Extract the residue with alcohol; potassium perchlorate is insoluble; sodium perchlorate passes into solution (Schoorl). Evaporate the clear alcoholic extract to dryness and test for sodium.

A further caution is necessary relative to the possible interference of elements such as Fe, Mn, Ni and Co, which can form double acetates with uranyl acetate and thus reduce the amount of the reagent available to form the double sodium compound.

EXPERIMENTS.

Test for Na in

a. NaCl, Na_2SO_4, HNa_2PO_4.

b. $NaKC_4H_4O_6$; and in $3(Na_2C_2O_4) \cdot Fe_2(C_2O_4)_3$.

c. A mixture of NaCl and $MgSO_4$ and of NaCl and $MgCl_2$.

d. A mixture of Na_2SO_4 and $ZnSO_4$.

B. By means of Bismuth Sulphate.

First convert the compound to sulphate by evaporations to dryness with sulphuric acid.

Apply the bismuth sulphate by Method *II*, page 252.

Immediately after the addition of the unknown to the reagent, gently warm the preparation over the micro-burner.

Sodium bismuth sulphate $3Na_2SO_4 \cdot 2Bi_2(SO_4)_3$ separates in the form of colorless slender rods or prisms with almost rounded ends, uniting in crosses, X's, or more or less star-like radiating clumps. The crystals separating near the circumference of the drop are usually shorter, stouter and more prismatic, while those nearer the center are more rod-like. It is these rod-like crystals with parallel extinction which are the more characteristic and

unless these are obtained the conclusion that sodium is present is unwarranted.

Potassium sulphate yields plates having a hexagonal or coffin-like outline or six-pointed stars and rosettes. When first formed these plates appear as circular disks but they rapidly acquire six sides or grow into rosettes. Ammonium, rubidium and cesium form similar hexagons and rosettes.

When both sodium and potassium are present, the rod-like crystals of the sodium double salt and the hexagons of the potassium salt each appear, permitting a simultaneous detection of sodium and potassium.

The addition of a very minute quantity of glycerine to the preparation before heating usually yields better crystals and more reliable results.

Precautions.

Tufts of fine radiating needles appearing greyish or brownish by transmitted light must not be regarded as indicating the presence of sodium; neither should stout prisms or elongated plates with forked or broken ends.

It is always best to remove members of the calcium group by means of sulphuric acid before applying the bismuth sulphate test. Calcium is especially to be guarded against since calcium sulphate may assume forms which simulate the sodium double salt; for although the crystals $CaSO_4 \cdot 2\,H_2O$ are monoclinic and usually lie in positions yielding oblique extinction, the extinction angle is small and unless care is exercised the student may credit them with parallel extinction.

Free mineral acids (especially nitric) greatly retard the separation of sodium bismuth sulphate.

In the absence of bismuth sulphate the reagent may be prepared as follows: At the corner of a slide place a drop of dilute sulphuric acid; add to this drop a little basic bismuth nitrate and stir until the bismuth salt has completely dissolved. Heat carefully until the water has been mostly expelled, and crystallization of the bismuth sulphate takes place; then add a rather large drop of water and a very minute drop of dilute nitric acid.

Stir for a few moments. The reagent drop should now slowly clear up, and a perfectly clear solution should result. If, however, the quantity of bismuth nitrate employed has been excessive, a residue remains; it is then necessary to decant the clear liquid. On another slide, or better on platinum foil, heat with dilute sulphuric acid a few particles of the substance to be tested. Drive off the excess of acid; cool and stir to provoke crystallization. If the drop refuses to crystallize, add more of the substance and heat again. A drop of the reagent prepared as above is placed at the corner of a slide, and to it is added, at the center, without stirring, a little of the moist mass of the material to be tested, taken from the platinum foil. Warm the preparation gently by holding it for a second or two about one centimeter above the micro-flame. Cool rapidly and examine at once.

This reaction is more valuable for potassium than for sodium and constitutes one of the best microchemical tests for bismuth.

EXPERIMENTS.

Test for Na in NaCl; HNa_2PO_4; in mixture of salts of Na and K and in mixtures of salts of Na and Ca.

C. By Means of Ammonium Silicofluoride.

See precautions given under Method *XV*, page 268.

To the drop of the neutral, or at the most only slightly acid solution of the material to be tested, add a fragment of ammonium silicofluoride. Allow to stand some time (*but never upon the stage of the microscope*) or hasten the reaction by gentle warming.

Sodium silicofluoride Na_2SiF_6 separates in the form of six-sided plates or prisms belonging to the hexagonal (?) system. Unless the crystals are excessively thin they appear with transmitted light to have a very faint rosy tint. They polarize only feebly.

The corresponding potassium salt of like formula is much more soluble, separates only from decidedly concentrated solutions, and crystallizes in small, colorless cubes, octahedra and combinations of these two, or in dodecahedra (isometric). A

hexagonal or pseudo-hexagonal modification of potassium silicofluoride is also known but is formed only at low temperatures. There is no possible danger, therefore, of confusing sodium and potassium. It is well to remember, however, that undue development of the diagonally opposite faces of an octahedron yields a crystal giving an image hexagonal in outline. The color of the crystal and its action on polarized light should leave no room for doubt as to its identity.

From very concentrated solutions, in addition to potassium, Li, Ca, Sr, Mg, Mn, Fe, etc., may possibly separate.

Barium, if present, is always precipitated with sodium, forming barium silicofluoride $BaSiF_6$, which cannot be confused with the sodium salt since the barium compound crystallizes in rods or fusiform crystals singly, in crosses or in irregular masses. Neither calcium nor strontium are precipitated by ammonium silicofluoride, but each salt is liable to separate from too concentrated solutions. The calcium salt $CaSiF_6 \cdot 2\ H_2O$ (monoclinic) forms spindle-shaped crystals, and though these are grouped in rosette-like masses, they are not to be mistaken for sodium.

The magnesium salt $MgSiF_6 \cdot 6\ H_2O$ is so much more soluble than those above mentioned as to never separate save upon evaporation or from very concentrated solution. Its crystals are rhombohedra, polarize strongly and do not have a six-sided outline. The silicofluoride of iron is isomorphous with the magnesium salt.

It is evident that if silicon is present in the material under examination, we can test for sodium and silicon in one operation by adding ammonium fluoride and then acidifying. A precipitation of crystals resembling sodium silicofluoride would point to the presence of sodium and silicon, or an element behaving, under like conditions, similarly to silicon. Thus we have titanofluorides, zirconofluorides and stanofluorides from elements of the fourth group; and from the transitional elements, glucinum in the second group and boron in the third, we may have glucinofluorides and borofluorides of sodium. Of these compounds the titanofluoride is known to be isomorphous with the silicofluoride of sodium.

In the absence of ammonium silicofluoride, pure silicon dioxide and ammonium fluoride can be added to the acidified drop of the solution to be examined.

Precautions.

Neither ammonium silicofluoride nor ammonium fluoride should ever be employed without having first been tested for the presence of sodium. If the reagents are found to be impure, it is necessary to sublime them in a platinum crucible, or receive the sublimate on platinum foil held over the material heated in a platinum cup.

In the presence of much calcium the crystals of sodium silicofluoride may become distinct hexagonal prisms instead of hexagonal plates, a fact which must be borne in mind when working with material of unknown composition.

The silicofluoride test is one of the most valuable at our command in testing silicates for sodium, in which case we need add only hydrofluoric acid or ammonium fluoride and sulphuric acid.

The addition of sodium and a fluoride gives us a test for Si, Ti or B.

Remember that glass slides cannot be used in this test for sodium; that only low-power (1 inch) objectives of great working distance should be employed, and even then the front lens should always be protected in some way, as, for example, with a small cover glass held in place with glycerine, oil or other suitable substance. The preparation should be examined as rapidly as possible, and must be quickly removed from the stage. When the microscope is provided with a nosepiece, it is advisable to remove the objectives not in use before examining any preparations liable to give off hydrofluoric acid or volatile fluorine compounds. The objective must always be thoroughly cleaned after any such tests.

EXPERIMENTS.

a. Test, as directed above, salts of Na in both neutral and acid solutions.

b. In order to better appreciate the reasons for employing celluloid slips, place a drop of water on a glass slide, acidulate (but add no Na), then add the reagents and examine the preparation.

c. Try to obtain crystals of K_2SiF_6 from KCl.

d. Add a little $CaCl_2$ to a solution containing Na and test as above.

e. To a solution of NaCl add a little SiO_2 or a trace of sodium silicate, then add NH_4F and an acid.

f. Repeat using some Ti compound in place of that of Si.

g. Test a salt of Ba as above, then a mixture of Ba and Na. Note that it constitutes an excellent test for Ba even in the presence of Na.

POTASSIUM.

Crystal Forms and Optical Properties of Common Salts of Potassium.

A. ISOTROPIC.

The alums (I); chloride (I); bromide (I); iodide (I); cyanide (I); molybdate (I); silicofluoride (I or H).

B. ANISOTROPIC.

Hexagonal. — Barium-potassium ferrocyanide; borate, tetra; silicofluoride (H or I).

Tetragonal. — Arsenate; cyanate; secondary phosphate.

Orthorhombic. — Antimonyl tartrate; chromate; nitrate; perchlorate; permanganate; sulphate; primary sulphate; sulphocyanate; primary tartrate; sodium-potassium tartrate.

Monoclinic. — Carbonate; chlorate; ferricyanide; ferrocyanide; iodate; oxalates; normal tartrate.

Triclinic. — Bichromate; persulphate.

DETECTION.

A. By Means of Chloroplatinic Acid.

Apply the reagent by Method *I*, page 251.

In a few moments, relatively large and beautifully formed, strongly refractive, bright, deep yellow crystals of K_2PtCl_6 appear. The usual form is that of the regular octahedron, sometimes showing faces of the cube. Horizontally elongated octahedra, or octahedra shortened parallel to one of the pairs of faces, are not unusual.

Since the crystals usually lie on one of the faces of the octahedron, there is apt to result an abnormal development of this face and the diagonally opposite and parallel face; the resulting crystal will thus exhibit an hexagonal outline when seen through the microscope, i.e., viewed from above. Combinations of cube and octahedron may lead to a somewhat similar appearance.

Not infrequently preparations are obtained in which twinning is very marked, and others in which there is a grouping of crystals in threes or fours. Of the twin crystals, one form seems to predominate; it results from the union, in reversed position, of two halves of an octahedron where the dividing plane is parallel to the two opposite faces.

The size and rate of development of the crystals formed will depend largely upon the concentration of the test drop. In very concentrated solutions, minute crystalline grains or the skeletons of octahedra are produced. In very dilute solutions the crystals appear only after some time. In case the test drop proves to be of the latter sort, heat it gently to cause slight evaporation, or expose to alcohol vapor, see Method *VI*, page 257.

Thin crystals are lemon yellow in color, but those which attain a considerable thickness are of a decided orange tint.

The best results are obtained from neutral solutions or those which are very slightly acid with hydrochloric acid. Excess of mineral acids is to be avoided, sulphuric acid in particular. Either evaporate and remove them, or mitigate their action by adding sodium acetate or sodium carbonate. If the latter salt is used, care should be taken to avoid making an alkaline solution and a large excess of the chloroplatinic acid must always be used.

Ammonium, rubidium, cesium and thallous-thallium also give octahedral crystals with chloroplatinic acid, the composition of the salts being similar to that of the potassium salt. The solubility of these compounds, and consequently the size of the crystals produced, decreases rapidly in the order in which the elements are named. Ammonium will give octahedra of the same size as those of potassium, hence its absence must be

assured before the test can be considered conclusive of the presence of potassium.

Salts of sodium form sodium chloroplatinate $Na_2PtCl_6 \cdot 6\ H_2O$, a quite soluble salt crystallizing in yellow triclinic prisms, having an extinction angle of about 22 degrees, and usually exhibiting brilliant polarization colors. It is seldom that well-formed, distinct crystals can be obtained, the result generally being an aggregate of imperfectly developed crystals. The salt is soluble in even strong alcohol, so that the addition of this reagent will not cause the separation of crystals, but evaporation is hastened.

The chloroplatinates of potassium, rubidium, cesium and ammonium are isometric. That of glucinum, which is also obtained when evaporation is practiced, is tetragonal. Lithium forms a very soluble chloroplatinate similar to that of sodium.

Precautions.

If salts of ammonium are present, or suspected of being present, place a little of the material to be tested on platinum foil, moisten with water, dry and ignite carefully, until all the ammonium salts have been driven off. Dissolve a portion of the residue in water, with the addition of a little hydrochloric acid if necessary; transfer to a glass slide, and test; then again ignite the remainder of the residue and test again.

The reagent should never be employed, even though freshly prepared, without first testing it by evaporation to ascertain whether octahedral crystals are deposited, since potassium may have been extracted from the containing vessel, or ammonium absorbed from the air. In making the reagent from metallic platinum it must be borne in mind that the acids employed may contain salts of potassium or ammonium, or both.

When the potassium salt consists of a compound other than the chloride it is always best to evaporate repeatedly with strong hydrochloric acid before applying the platinum reagent.

EXPERIMENTS.

a. Test as above KCl, NaCl, NH_4Cl.
b. Test a phosphate, a sulphate, and a tartrate of potassium.
c. Test K_2SO_4 in the presence of much H_2SO_4.

B. By Means of Bismuth Sulphate.

For method of applying the test and discussion of the properties of the salt formed see Test *B* under Sodium, page 276.

Potassium bismuth sulphate $3\ K_2SO_4 \cdot Bi_2(SO_4)_3$ separates first as circular disks which later develop into hexagonal plates or the skeletons of hexagons, i.e., six-pointed stars and rosettes.

Ammonium salts yield similar crystals. Hence this test cannot be used to differentiate between potassium and ammonium.

Precautions.

See Sodium, Method *B*.

EXPERIMENTS.

See Sodium, Method *B*.

C. By Means of Perchloric Acid.

Apply the reagent by Method *I*, page 251.

In a few seconds, colorless, highly refractive, clear-cut crystals of potassium perchlorate $KClO_4$ separate. These crystals belong to the orthorhombic system, but at first sight those first formed usually appear to be isometric, while later, forms which might be mistaken for monoclinic prisms appear.

Rubidium and cesium give a like reaction, and their perchlorates are more insoluble than that of potassium. Thallium forms an even more insoluble perchlorate. The perchlorates of the elements of the other groups that are generally met with in ordinary work, are sufficiently soluble not to interfere.

Potassium, rubidium, and cesium perchlorates possess a remarkable adsorptive power for potassium permanganate. The crystals are not altered in habit, size or rapidity of formation but become colored rose or rose-violet. The compounds resulting are a solid solution of potassium permanganate in the perchlorates and are considered by crystallographers to be isomorphous mixtures of the two salts.

Advantage may be taken of this property of the potassium salt to obtain an exceedingly beautiful test, for if the test drop contains sodium permanganate, the potassium perchlorate separating therefrom will be colored. Add to the test drop a little

sodium manganate,[1] so as to impart a distinct green, then add a tiny drop of hydrochloric acid, thus converting the manganate into permanganate. The perchloric acid is then caused to flow in. The crystals of potassium perchlorate which separate have the same form as before, but are a beautiful deep rose color, the color intensity varying with the amount of permanganate present. In a few moments the liquid is completely decolorized, and the precipitated crystals deeply colored. Performed in this way the test is a most interesting and instructive one.

The perchlorate reaction is of more value for the detection of the acid by means of rubidium chloride and for the removal of potassium to prevent interferences with tests for other elements, than for the identification of potassium.

Precautions.

To obtain truly satisfactory results, careful attention to concentrations must be given, for if the solution is too concentrated potassium perchlorate is precipitated at once in malformed or skeleton crystals; while if too dilute the separation of the solid phase is too slow.

Exposure to alcohol vapor hastens the reaction.

In the absence of perchloric acid ammonium perchlorate may be used.

EXPERIMENTS.

a. Try the above reaction with different salts of K.

b. Introduce $NaMnO_4$ into the test drop, and test as above.

c. Make a mixture of K and Na salts. Treat a drop of a solution of this material with $HClO_4$, evaporate, treat with the reagent again and again evaporate, extract the dry residue with alcohol, and test the alcoholic extract for sodium with $UO_2(C_2H_3O_2)_2$.

d. Try the action of $HClO_4$ on members of the magnesium group, and upon members of the calcium group.

AMMONIUM.

Crystal Forms and Optical Properties of Common Salts of Ammonium.

[1] Sodium manganate is employed instead of sodium permanganate because it is more stable as a laboratory reagent.

A. ISOTROPIC.

The alums (I); chloride (I); bromide (I); iodide (I); silicofluoride (I).

B. ANISOTROPIC.

Hexagonal. — Fluoride.

Tetragonal. — Borate $(NH_4)_2B_4O_7 \cdot 4\ H_2O$; primary phosphate.

Orthorhombic. — Bicarbonate; nitrate;[1] primary oxalate; normal oxalate; perchlorate; primary tartrate; sulphate.

Monoclinic. — Secondary arsenate; bichromate; chromate; molybdate; persulphate; ammonium-sodium acid-phosphate; secondary phosphate; primary sulphate; ammonium-ferrous sulphate; sulphocyanate; normal tartrate; thiosulphate.

Triclinic.

DETECTION.

Unless the analyst is dealing with a simple salt of ammonium, it is always best to expel the NH_3 from the compound by distillation (see page 244) with sodium hydroxide or magnesium oxide. The ammonia set free is fixed by absorption in a drop of dilute hydrochloric acid (or other acid). The resulting solution of ammonium chloride is concentrated or evaporated to dryness and the material thus obtained tested for ammonium.

A. By Means of Chloroplatinic Acid.

See Method *I*, page 251, and discussion and precautions given under Potassium, test *A*, page 281.

B. Through the Formation of Ammonium Magnesium Phosphate.

The typical reaction for this identity test may be written

$$NH_4Cl + MgCl_2 + HNa_2PO_4 + NaOH = NH_4MgPO_4 + 3\ NaCl + H_2O.$$

[1] NH_4NO_3 is pseudotetragonal.

To the drop to be tested add a fragment of sodium phosphate and a very little magnesium chloride, stir thoroughly. Beside the drop place a drop of dilute solution of sodium hydroxide and cause this drop to flow into the other.

Ammonium magnesium phosphate separates in crystals having the formula $NH_4MgPO_4 \cdot 6\ H_2O$, belonging to the orthorhombic system and exhibiting an exceptionally strong tendency to assume hemihedral, hemimorphic and skeletal forms. This compound usually separates first as an almost amorphous precipitate which soon changes into star-like and X-shaped crystallites. Soon the X's fill out and envelope-like crystals result and at the same time rectangular prisms resembling roofs of houses appear.

In preparations containing but little of the ammonium magnesium phosphate the stars and X's are usually absent.

Precautions.

Since the amount of ammonia obtained upon distillation is usually small it is quite necessary to avoid an excess of the magnesium salt and also the phosphate, for the reason that magnesium phosphate is almost sure to be precipitated. This latter salt appears as an amorphous deposit and if conditions are favorable it may eventually crystallize in star-like crystal aggregates, distinct, it is true, from the ammonium magnesium phosphate, yet very apt to confuse the beginner.

If the phosphate test be applied directly to a solution of the unknown salt it must be remembered that both phosphates and hydroxides of a number of elements will probably be precipitated.

EXPERIMENTS.

Test as above for the presence of NH_4 in several different salts containing this radical.

CALCIUM.

Crystal Forms and Optical Properties of Common Salts of Calcium.

A. ISOTROPIC.

B. ANISOTROPIC.

Hexagonal. — Carbonate (H or O); chloride.

Tetragonal. — Oxalate.

Orthorhombic. — Arsenate (O or M); chromate (O or M); tartrate.

Monoclinic. — Nitrate; sulphate; double sulphates of calcium and sodium or potassium.

Triclinic. — Ferrocyanide.

DETECTION.

A. By Means of Dilute Sulphuric Acid.

Apply the reagent by Method *I*, page 251.

If calcium is present, monoclinic crystals of calcium sulphate will rapidly appear near the circumference of the drop of the substance. These crystals take the form of exceedingly slender, colorless, transparent needles, either singly, in sheaves, in bundles or in star-like clusters. When in tiny sheaves near the edge of the drop the crystals have often a more or less brownish tint when seen by transmitted light. Shortly after the appearance of the bunches of needles at the periphery, long, thin, slender and plate-like prisms with obliquely truncated ends are formed throughout the drop. These prisms are frequently twinned, yielding so-called arrowhead or swallow-tailed and X-like twins. These twin crystals are the most characteristic of the forms assumed by calcium sulphate of the formula $CaSO_4 \cdot 2\,H_2O$.

If no crystals are visible after waiting a short time, the preparation may be cautiously concentrated. This procedure (evaporation) may, however, lead to the separation of such an amount of other salts as to render difficult the detection of the crystals of calcium sulphate. A better plan is to hasten the separation of the calcium salt by exposing the test drop to the vapor of alcohol; see page 257, Method *VI*.

Salts of strontium may, under exceptional conditions (if the preparation be examined at once), yield a precipitate which closely resembles that given by calcium. These crystals of strontium sulphate rapidly disintegrate, however, and there

results a fine granular deposit. This granular or sandy deposit is the form assumed by strontium sulphate under the conditions which ordinarily obtain in this test. Barium is immediately precipitated in an exceedingly finely divided condition, amorphous in appearance, but occasionally $BaSO_4$ separates in crystalline form (see Barium).

Any lead which may be present will also be precipitated as a dense white amorphous powder. Occasionally, however, lead will yield a precipitate consisting of orthorhombic crystals.

Silver will separate as Ag_2SO_4 in the form of colorless, highly refractive, orthorhombic prisms, rhombs or crystallites of characteristic appearance.

When the drop of sulphuric acid flows into the drop to be tested which contains mercurous nitrate or other soluble mercurous salts, the mercurous sulphate produced often assumes at first the form of acicular needles, closely resembling those of calcium sulphate; they are, however, blackish by transmitted light and rapidly take the shape of rod-like prisms quite distinct from the prismatic forms of the calcium salt.

Precautions.

Before applying the sulphate test, add a drop of dilute hydrochloric acid to assure the absence of lead, silver and mercurous salts. If a precipitate is formed decant.

It is not always wise to conclude that calcium is present when crystals, which apparently resemble the star- and sheaf-like aggregates of calcium sulphate, separate at once on the addition of sulphuric acid, even if the crystals exhibit oblique extinction. It sometimes happens that other compounds, not calcium sulphate, separate in forms not to be distinguished, at first sight, from the crystals of the calcium salt. Such instances are fortunately very rare. Allowing the preparation to stand a few minutes will usually permit the crystals to develop and their appearance will then be such as to avoid error. If, however, the analyst is still in doubt he may proceed as follows: After allowing sufficient time for the separation of almost all the calcium as $CaSO_4 \cdot 2\,H_2O$, draw off the supernatant liquor, add to the residue

a solution of ammonium carbonate, the crystals of calcium sulphate will be dissolved and highly refractive rhombs and grains of calcium carbonate will appear; these are easily found by examining the preparation between crossed nicols. A high power is generally required.

A serious interference is that of the chlorides of the trivalent metals. In the presence of these salts in large amounts it is generally advisable to proceed thus: Add to the somewhat dilute solution, ammonium acetate, heat to boiling, but avoid long or violent ebullition, since in the latter case the precipitate formed often refuses to settle. The clear liquid is then separated from the precipitate (by drawing-off on the slide, filtration, or by means of the centrifuge), concentrated if necessary, and tested for calcium with sulphuric acid.

Behrens states that calcium cannot satisfactorily be detected in the presence of borates; this appears to be true when only a minute quantity of calcium is present with a high percentage of boron and other salts; in such an event test by Method *B*.

Strong mineral acids, in excess, so increase the solubility of calcium sulphate as to require evaporation almost to complete dryness before the crystals of this salt appear. The addition of a fragment or two of sodium acetate or of ammonium acetate is always necessary in such cases before the sulphuric acid drop is allowed to flow in. This method of mitigating the action of the free acids, also reduces the delicacy of the reaction because of the formation of more soluble double sulphates of calcium and sodium or ammonium. Hence the addition of an excess of a soluble sulphate instead of sulphuric acid is not to be recommended.

EXPERIMENTS.

a. Try reaction, in the manner given above, on salts of calcium in neutral solution.

b. Try the effect of precipitating in the presence of free HCl; then in the presence of free HNO_3.

c. Precipitate with dilute H_2SO_4, then heat, adding more acid if necessary, until white fumes are given off, cool, breathe on the preparation and examine. Calcium will separate either as the salt $CaSO_4$, or as $CaSO_4 \cdot H_2SO_4$. The crystal forms most frequently met with are thin, rounded, prism-like plates or fusiform

crystals with tufted ends. This modification of the test is not satisfactory for Ca, but is characteristic for Ba and for Sr (q.v.).

d. Try testing for a trace of Ca in the presence of a large quantity of salts of the elements of Group I.

e. Try effect of a solution of $(NH_4)_2CO_3$ on crystals of $CaSO_4 \cdot 2\,H_2O$.

B. By Means of Oxalic Acid.

Apply the reagent according to Method *I*, page 251.

The oxalate which separates at room temperature from neutral or slightly alkaline solution has the formula $CaC_2O_4 \cdot 3\,H_2O$, and belongs to the tetragonal system. The crystals are tiny, highly refractive octahedra, or rectangular or square plates. If rapidly formed, crosses and bundles or sheaves of crystallites will be seen. From hot or acid solutions a monoclinic oxalate $CaC_2O_4 \cdot H_2O$ separates which is practically valueless as an identity test for calcium. This same salt appears to sometimes separate if a large excess of oxalic acid has been added. In addition to changing the crystal form free mineral acids so increase the solubility of calcium oxalate as to sometimes prevent its precipitation.

Strontium gives with oxalic acid an identical reaction, save that the crystals of strontium oxalate are generally somewhat larger.

Barium oxalate takes the form of fibrous bundles of needles and is not likely to be mistaken for either calcium or strontium.

Zinc under certain conditions may yield a zinc oxalate difficult to distinguish from the oxalates of calcium and strontium.

Magnesium oxalate will separate in forms not to be distinguished from calcium oxalate if the test drop contains much acetic acid, but in the absence of this acid magnesium oxalate will not appear.

Manganese forms groups of radiating needles (see Manganese).

Lead oxalate may also assume forms somewhat resembling those of calcium oxalate, but after a short time these crystals grow into large, well-developed prisms.

Silver oxalate separates first as a granular deposit, soon changing to crystals of a great variety of forms, hexagonal plates, six-sided plate-like prisms and stout prisms with obliquely truncated ends.

In the presence of stannic chloride Behrens has shown that calcium oxalate assumes the form of tiny oval grains exhibiting an octahedral tendency while strontium yields large clear-cut beautifully developed tetragonal octahedra and barium gives short stout prisms singly, in crosses and in radiating masses, or if much barium is present, fusiform crystals and bundles of radiating needles are seen.

Precautions.

Oxalic acid, under favorable conditions, can cause the separation of oxalates of the following elements: Gl, Ca, Sr, Ba, Mg, Zn, Cd, Tl; rare earths; Sb, Bi, Sn, Pb, U, Mn, Fe, Ni, Co, Cu, Ag.

In the event of a precipitate of doubtful composition being obtained, draw off the supernatant liquid, or separate by means of the centrifuge, and add to the residue a tiny drop of dilute sulphuric acid; calcium oxalate is dissolved and in a few seconds the characteristic crystals of $CaSO_4 \cdot 2\,H_2O$ make their appearance.

Owing to the minute size of the crystals, testing for calcium with oxalic acid is not always satisfactory. As an offset to this disadvantage, chlorides of the trivalent metals, unless in concentrated solution, and boric acid have no effect other than a retardation of the reaction. A small amount of free nitric acid merely greatly retards the separation of the oxalates of calcium and strontium, but prevents the formation of barium oxalate.

EXPERIMENTS.

a. Try reaction after the manner given above, on a salt of Ca in a neutral solution. Try again in the presence of free HCl, then in the presence of free HNO_3.

b. Precipitate $CaC_2O_4 \cdot 3\,H_2O$, draw off the supernatant liquor and treat the residue with dilute H_2SO_4. After examining the preparation, add more acid, and heat until white fumes appear; cool; breathe upon the preparation and examine again.

STRONTIUM.

Crystal Forms and Optical Properties of Common Salts of Strontium.

A. ISOTROPIC. Nitrate (I).

B. ANISOTROPIC.

Hexagonal.

Tetragonal.

Orthorhombic. — Chlorate; sulphate.

Monoclinic. — Acetate; chromate.

Triclinic. — Chloride.

DETECTION.

A. By Means of Sulphuric Acid.

First obtain a precipitate of strontium sulphate by Method *I*, page 251. Examine it with the microscope to learn the character of the solid phase. Then proceed with the identification of the practically amorphous precipitate by recrystallization from concentrated sulphuric acid by Method *XII*, page 264, or from concentrated hydrochloric acid by the same method.

Rarely, strontium sulphate separates in the cold in crystal form. Heating with concentrated sulphuric acid and gently breathing upon the preparation yields at first globular masses and tiny rhombic plates of a salt of the formula $SrSO_4$ (or sometimes probably $SrSO_4 \cdot H_2SO_4$). These tiny plates eventually develop into more or less irregular spindle-shaped crystals, which gradually enlarge at the middle until they become irregular crosses with two very short arms. The appearance is very characteristic. The only element liable to lead to error is lead which often first assumes forms closely resembling those of strontium, later growing into crystallites which may be mistaken for barium.

Recrystallized from concentrated hydrochloric acid strontium sulphate has an entirely different habit. Square and rectangular plates appear followed by thin prisms and sheaves of slender pointed crystals. The solubility of strontium sulphate in hydrochloric acid is quite low, hence it is necessary to employ a large drop of the solvent and therefore it is seldom that all the precipitate will dissolve. It follows that to obtain the best results the solvent should be decanted from the precipitate immediately

after heating, and before crystallization sets in. The resulting crystals are quite small and of varied form. The results are less satisfactory than with sulphuric acid, but there is, on the other hand, the advantage that barium sulphate is practically insoluble in hydrochloric acid. It is of course essential in recrystallizing from hydrochloric acid that not more than mere traces of free sulphuric acid be present. Free nitric acid should be absent.

Before any attempt is made to recrystallize the precipitate of strontium sulphate, it is advisable, and usually necessary, to remove any calcium which may be present. This is accomplished by extracting the precipitate with hot water in which the calcium salt is soluble. Unless this is done, peculiar crystal forms are obtained which are difficult to interpret.

If only a small amount of barium is present, characteristic crystals of strontium sulphate are still obtained from hot sulphuric acid, but much barium is apt to alter the usual crystal form, although the appearance of the crystals separating still suggests the strontium sulphate type. An excess of barium seems to cause the majority of the crystals to assume forms somewhat resembling barium sulphate. But, in general, crystals of both strontium and barium sulphate can be distinguished in mixtures of these two elements.

Any lead which may be present will be precipitated in an amorphous condition by the dilute acid, although under rare conditions it may appear crystalline. Recrystallized from hot sulphuric acid, the lead sulphate, as stated above, will separate in forms which at first closely resemble those of strontium sulphate and which, later, grow to forms which may be mistaken for barium sulphate. Recrystallized from hydrochloric acid there is less danger of error. If in doubt, extract the precipitated sulphates with a solution of potassium or sodium hydroxide in which lead sulphate is soluble.

Silver sulphate will appear as already described under calcium. Hence silver as well as most of the lead should first be removed with hydrochloric acid.

As in the case of calcium, chlorides of the trivalent metals

and salts of boric acid may sometimes interfere with the formation of typical crystals of strontium sulphate.

EXPERIMENTS.

a. To a drop of moderately dilute solution of $SrCl_2$, add dilute H_2SO_4 and examine at once.

b. Recrystallize $SrSO_4$ from H_2SO_4 and from HCl.

c. Try to recrystallize $SrSO_4$ from HCl in the presence of H_2SO_4.

d. Make a mixture of Ca and Sr salts and add H_2SO_4. Recrystallize the product from H_2SO_4 without having removed the Ca. In another portion remove the Ca by extracting with boiling water and then recrystallize the residue.

B. By Means of Oxalic Acid.

See directions given under calcium, Method *B*, page 291. The crystals of strontium oxalate are similar to those obtained with calcium, but are usually distinctly larger, and crosses, prisms, and four-pointed rosettes are more abundant and larger. The crystals are either tetragonal or monoclinic depending upon whether formed in the cold or separating from hot solutions.

Precautions.

To avoid error when testing with oxalic acid, it is always advisable, after the crystals have well formed, to draw off the supernatant solution and add dilute sulphuric acid to the precipitate. If no crystals of calcium sulphate appear after a few minutes, add more acid and heat until white fumes appear, carefully observing the usual precautions. Transfer the drop of acid to a clean slide, breathe on the drop and examine for fusiform crystals of strontium sulphate.

EXPERIMENTS.

a. Test a drop of $SrCl_2$ solution with $H_2C_2O_4$.

b. Treat the oxalate thus obtained with H_2SO_4 and recrystallize.

BARIUM.

Crystal Forms and Optical Properties of Common Salts of Barium.

A. *ISOTROPIC.* Nitrate (I).

B. *ANISOTROPIC.*

Hexagonal. — Nitrite.

Tetragonal.
Orthorhombic. — Chromate (O or M).
Monoclinic. — Chloride; chlorate; bromide; ferrocyanide; acid-oxalate.
Triclinic. — Acetate.

DETECTION.

A. By Means of Sulphuric Acid.

Read fully the directions and comments under Calcium and Strontium, pages 289 and 290, and 293 and 294.

The amorphous or semicrystalline precipitate first obtained must be recrystallized from concentrated sulphuric acid before identification is possible. The recrystallized salt appears at first as tiny rectangular plates and X-like crystallites. In this stage of development it may be mistaken for strontium sulphate. Continue breathing upon the drop of acid; under the influence of the moisture absorbed the crystallites grow rapidly, still retaining their X-like shape but the arms of the X's become feathered. There is a marked tendency for two adjacent arms of the X to develop much more rapidly than the other two. These crystallites grow relatively large and are constant and peculiar to barium.

In the presence of certain acids or acid salts, especially from hot solutions, crystallites of barium sulphate may sometimes be obtained immediately upon the addition of dilute sulphuric acid.

In the event of a heavy precipitate being obtained with the reagent, it is wise to remove a small portion to another slide for crystallization, rather than attempt to dissolve the whole mass.

Recrystallization in the presence of much calcium is to be avoided. First extract the calcium sulphate with hot water.

In the presence of moderate amounts of strontium the crystallites of barium sulphate are generally not well formed. If strontium is in excess, the crystals separating from the hot sulphuric acid have the general type of strontium sulphate, but are not well developed and exhibit an inclination to approach the X-forms of barium sulphate. For this reason it is advisable to remove any strontium which may be present by repeatedly

heating with hydrochloric acid, in which strontium sulphate is soluble, while the barium compound remains undissolved and can then be recrystallized by heating with sulphuric acid. Even in mixtures, however, it is almost invariably possible to find characteristic forms of both barium and strontium, providing the analyst has a little patience and carefully examines the entire preparation.

Any lead sulphate which may be present will appear, first, in crystals very suggestive of strontium sulphate, then, in a short time, in larger crystallites which may at times be mistaken for barium sulphate. Treatment with hydrochloric acid, or, better, with sodium hydroxide, will remove the lead, leaving the barium salt unacted upon.

Precautions.

It is sometimes desirable to apply other tests to the precipitated sulphate in order to confirm the presence of barium. In such an event, transfer the washed precipitate to platinum foil or to a platinum cup and fuse with potassium carbonate. The fused mass is then extracted with water and the residue of barium carbonate dissolved in hydrochloric acid. This solution can then be tested for barium by any of the tests given below.

Since chlorides of the trivalent metals sometimes interfere with the formation of characteristic crystals of barium sulphate, it is advisable to decant the supernatant liquor after the addition of the reagent and before heating with an excess of the acid. When dealing with unknown mixtures it is always best to proceed in this manner.

EXPERIMENTS.

a. Try above method on a simple salt of Ba.

b. Make a mixture of salts of Ca and Ba, recrystallize at once without removing the Ca. From another portion remove the Ca with hot water and recrystallize the residue.

c. Try a mixture of Sr and Ba. Remove the Sr by treating with HCl and recrystallize the residue.

d. Try a mixture of Ca, Sr and Ba, recrystallizing at once, then removing in turn the Ca with hot water and the Sr with HCl.

e. After having tried the other reactions for Ba fuse some $BaSO_4$ with K_2CO_3 and proceed as directed above.

B. By Means of Oxalic Acid.

Read carefully the discussion of this test as given under Calcium and Strontium, pages 292 and 293.

Barium oxalate $BaC_2O_4 \cdot nH_2O$ forms large branching aggregates, radiating bundles of branching crystallites and sheaves of bristling fibrous needles. Rarely, well-developed monoclinic prisms may be obtained. The branching crystallites are characteristic of barium and are never given by calcium or by strontium.

Precautions.

The solution to be tested should be neutral; even a very little trace of acid is apt to prevent the separation of the characteristic crystals.

If no crystals appear after a short time, add a fragment of sodium or ammonium acetate.

When calcium or strontium are present the characteristic crystal forms of barium oxalate will rarely be obtained. Recourse may then be had to testing in *dilute* nitric acid. From nitric acid solutions the barium salt will not separate, while the oxalates of calcium and strontium will *slowly* crystallize in their usual form. After allowing sufficient time for the complete separation of calcium and strontium, decant, concentrate the solution and add sodium acetate. Barium oxalate now appears, usually in the form of rosettes of thin prisms.

Barium oxalate, like the oxalates of calcium and strontium, assumes different crystal forms, according as the test drop is hot or cold. Hot solutions give rise to the production of strongly polarizing orthorhombic plates.

Since, in order to facilitate the separation of barium oxalate, sodium acetate has been added, it is well to bear in mind that there is danger of interference from members of the magnesium group.

Borates present in the test drop, if in large amount, may prevent the formation of characteristic crystals of barium oxalate.

Although chlorides of iron and aluminum have, as has been

stated, no deleterious influence on the precipitation of the oxalates of calcium and strontium, we meet, in the case of barium, with a most interesting and remarkable reaction. Owing to the formation of double oxalates of barium and iron or barium and aluminum, instead of the typical fibrous bundles of needles and crystallites, there are now obtained tufts and bunches of very long exceedingly fine curving hair-like crystals (trichites) of characteristic appearance. The chemical composition and formulas of these compounds have not yet been definitely ascertained.

In order to obtain this interesting compound, proceed as follows: To the test drop containing barium, add ferric chloride in sufficient amount to impart a faint but distinctly yellow color; then add a fragment or two of sodium or ammonium acetate; stir. The yellow color should now have changed to a reddish tint. Into this drop, thus prepared, cause a drop of oxalic acid to flow. Tufts and sheaves of very fine hairs soon appear. The hairs rapidly grow longer and longer and soon begin to curve in a most peculiar manner. The presence of calcium or strontium, or both, in even large amounts does not appear to have any serious influence on the formation of this double oxalate of barium and iron, save that its separation is often somewhat retarded. In such mixtures the oxalates of calcium and strontium first appear in their usual form, then after a time the hair-like tufts of the double oxalate appear. If the quantity of barium is quite small, in proportion to the iron, little rosettes of radiating needles are obtained, separating near the edges of the drop.

Aluminum gives rise to the formation of a similar product, but the crystal masses are colorless, while those of the iron salt are light brown.

EXPERIMENTS.

a. Test a salt of Ba with $H_2C_2O_4$, in both hot and cold solutions.

b. Make a mixture of Ca, Sr, Ba. Add $H_2C_2O_4$. Repeat the experiment in HNO_3 solution; after a few minutes, decant the clear solution, concentrate slightly and add $NaC_2H_3O_2$.

c. Try the effect of the presence of $FeCl_3$ on the precipitation of oxalates of Ca, Sr, Ba; first each element separately, then in mixtures of Ca and Ba; Sr and Ba; Ca, Sr and Ba.

d. If barium borate is at hand, try testing it for Ba.

e. Try $H_2C_2O_4$ on a salt of Mg, then add an excess of $HC_2H_3O_2$ to the test drop and examine again.

f. Test salts of Zn, Cd, Pb and Ag.

BEHAVIOR OF CALCIUM, STRONTIUM AND BARIUM TO OTHER IMPORTANT REAGENTS.

The tests already given are generally ample for the proper identification of the alkaline earths, but occasionally problems arise where supplementary or alternate methods are desirable. The following reactions have, therefore, been included both on account of their applicability to the examination of unknown material and because of the further light they throw upon the similarities and differences between the members of the Calcium Group.

Behavior with Potassium Ferrocyanide.

The reagent is applied by Method *I*, page 251, to the test drop acidulated with acetic acid and containing a little ammonium chloride.

Calcium yields tiny rectangular or square plates.

Strontium fails to form a ferrocyanide under the conditions given above.

Barium yields large, clear, transparent, yellow rhombs probably belonging either to the orthorhombic or to the triclinic system, depending upon the amount of water of hydration.

The salts separating are double ferrocyanides to which the following formulas have been ascribed: $K_2CaFe(CN)_6 \cdot 3\,H_2O$ and $K_2BaFe(CN)_6 \cdot 5\,H_2O$ (O?) or $K_2BaFe(CN)_6 \cdot 3\,H_2O$ (Tr). As usually obtained the barium salt extinguishes parallel to a line drawn through the acute angles of the rhombs. This fact enables the analyst to readily differentiate between the double barium salt and chance separation of the reagent (M).

Free mineral acids must be absent.

Potassium ferrocyanide, though giving a neat reaction with pure salts of barium, is of little value when dealing with mixtures. It is then often difficult to avoid the precipitation of

calcium with the barium, particularly if much ammonium chloride is present, or if much sodium acetate has been added to mitigate the action of mineral acids.

From mixtures, strontium may sometimes be precipitated in an amorphous condition if the solution is quite concentrated, and may thus interfere with the test. Pure salts of strontium give, even in very concentrated solutions, only a granular deposit consisting of globular masses, exhibiting no distinguishable crystal form.

Magnesium is precipitated from ammoniacal solutions, but neither from acid nor from neutral solutions; hence the presence of this element will not mask the test for barium.

In addition to calcium and strontium, there are a number of other elements, which, if present, will either be precipitated in insoluble form or will interfere with the formation of the barium crystals. In this list the most frequently met with will be lead, iron, zinc, rare earths and less often copper, mercury, uranium, and titanium.

EXPERIMENTS.

a. Crystallize a little of the reagent $K_4Fe(CN)_6$, alone, and determine its optical properties.

b. Try reagent on pure salts of Ca, Sr, Ba, using both dilute and concentrated solutions. Try again, this time proceeding as directed above, using $HC_2H_3O_2$ and NH_4Cl.

c. Try the reagent on mixtures of Ca and Sr, Ca and Ba, Sr and Ba.

d. Try effect of the reagent on salts of Pb, Zn and Fe. Then make mixtures of Ba and these elements and test.

e. Make a preparation of $K_2BaFe(CN)_6$, measure the angles of the crystals and determine the optical properties of the compound.

Behavior with Ammonium or Potassium Bichromate.

The reagent is applied to the test drop in solid form, Method *III*, page 252.

From acetic acid solution, barium chromate $BaCrO_4$ is immediately precipitated, orthorhombic, in the form of minute light-yellow globular masses, or tiny rods with rounded ends. Strontium chromate will not separate from acid solutions but only from neutral or slightly alkaline solutions. Calcium is

precipitated by bichromate from neither acid, neutral nor ammoniacal solutions.

The strontium salt of the formula $SrCrO_4$ appears from ammoniacal solution as exceedingly tiny yellow globulites or dumb-bell-like aggregates; it is dimorphic, being either orthorhombic or monoclinic. If the former, it is isomorphous with the barium salt.

When this test is used, acidify the dilute drop with acetic acid, then add the fragment of bichromate. Do not stir, and avoid rubbing the glass with rod or wire. Barium chromate separates at once if present. After several minutes decant if a precipitate has formed. To the decanted solution or clear drop add a small drop of ammonium hydroxide and examine the preparation for dumb-bells of strontium chromate.

If both barium and strontium are believed to be present it is best to warm the preparation to cause as complete a precipitation of barium chromate as possible before adding the ammonium hydroxide, but care must be taken to avoid unduly concentrating the drop. It is also usually better to allow the ammonium hydroxide to flow into the drop from one side rather than add it directly to the middle of the drop.

Normal potassium chromate produces, with barium salts, a precipitate similar to that obtained with dichromate, but is not to be recommended as a reagent because of its property of also precipitating strontium compounds in acid solution.

Ordinarily the precipitate of barium chromate is mostly amorphous in appearance. Here and there, however, will be found areas where there are recognizable crystals. A high power is always required for the recognition of the form of the crystals, hence the drop to be studied must be spread out quite thin.

Free mineral acids interfere with the test.

In addition to barium and strontium, it must be remembered that dichromate will also yield crystalline precipitates with silver, lead, mercury and thallium, but in these cases nitric acid may be present.

EXPERIMENTS.

a. Try reaction on salts of Ba, Sr and Ca, in acid, neutral and ammoniacal solutions, and both in concentrated and in dilute solutions.

b. Try mixtures of Ca and Ba, Sr and Ba; use solutions acidified with $HC_2H_3O_2$, decant the clear solution, and to it add NH_4OH.

c. Try the reagent upon Ba and Sr salts in HNO_3 solution. Then try it upon Ag, Pb and mercurous salts in HNO_3 solution.

Behavior with Primary Sodium Carbonate.

An almost saturated solution of the reagent is added to the dilute ammoniacal test drop by Method *I*, page 251.

Calcium carbonate $CaCO_3$ separates in very small disks and rhombs (H or O).

Strontium yields spherulites often of considerable size.

Barium separates as minute spider-like aggregates and tiny spherulites, the latter often uniting to form spindles and dumbbell-like masses.

The addition of the reagent in solid form gives nearly as good results.

Warming the preparation increases the rapidity of the reaction and leads to the formation of better crystals.

Unless the test drop is quite dilute an amorphous precipitate results.

Ammonium carbonate can be substituted for the sodium salt; the crystals then differ but little if any from those obtained as above, but normal sodium carbonate gives amorphous precipitates only and therefore should never be employed.

When simple salts of the elements calcium, strontium and barium are employed it is not at all difficult to distinguish between them by testing with primary sodium carbonate (or ammonium carbonate). But if two or more of these elements are present the method fails, characteristic crystals being the exception.

In the presence of a great excess of the reagent a double carbonate of calcium and sodium separates, having the formula $CaCO_3 \cdot Na_2CO_3 \cdot 5\,H_2O$, which crystallizes in stout monoclinic prisms somewhat resembling the short, thin prisms of calcium sulphate. Strontium and barium prevent the formation of the double salt.

Elements of the magnesium group interfere. Lithium likewise interferes. But the chlorides of iron and aluminum and the salts of boric acid have no appreciable effect on the reaction.

When in doubt as to the nature of a precipitate formed by the treatment with $HNaCO_3$, decant the supernatant solution, which is easily done since the crystals of calcium carbonate adhere to the glass slide, wash the residue, and then add dilute sulphuric acid. If the precipitate is due to calcium, characteristic crystals of $CaSO_4 \cdot 2\ H_2O$ appear.

Primary sodium carbonate is of more value as a group reagent than as an identification test. Moreover, chance formations of crystals of alkali carbonates may be met with in the progress of the systematic analysis of unknown material, particularly when testing for zinc (q.v.).

MAGNESIUM.

Crystal Forms and Optical Properties of Common Salts of Magnesium.

A. ISOTROPIC.

B. ANISOTROPIC.

Hexagonal. — Pyroantimonate.

Tetragonal. — Fluoride.

Orthorhombic.—Ammonium-magnesium phosphate; sulphate; primary tartrate.

Monoclinic. — Acetate; chloride; nitrate; primary phosphate; ammonium-magnesium sulphate; potassium-magnesium sulphate; normal tartrate.

Triclinic.

DETECTION.

A. By Means of Uranyl Acetate and Sodium Acetate.

This test has already been described at length under Sodium, Method *A*, page 275.

B. By Means of Secondary Sodium Phosphate (HNa_2PO_4) in Ammoniacal Solution.

For the reaction see Ammonium, page 286.

The detection of magnesium in simple salts is comparatively easy and rapid, since characteristic crystals are readily obtained, but its microchemical identification in complex mixtures is usually a matter of not a little difficulty, in as much as this element is commonly associated with others, closely related, which are prone to interfere with or prevent the formation of typical crystals with the reagents employed for its recognition.

Two methods are available, the choice of procedure depending upon the nature of the salts present in the drop to be tested. In all cases where there is a doubt as to the probable composition of the material to be examined, it is best to have recourse at once to the modification II.[1]

I. To the solution of the material to be tested, which must not be too concentrated, add several fragments of ammonium chloride; stir; then add a very slight excess of ammonium hydroxide, and warm the preparation. (If a precipitate results it is best to draw off the clear solution.) To the warm solution add a small crystal of secondary sodium phosphate. Crystals of ammonium magnesium phosphate $NH_4MgPO_4 \cdot 6\,H_2O$ soon appear.

II. To the solution to be tested add a fragment or two of citric acid, stir until dissolved, then add an excess of ammonium hydroxide. Evaporate to dryness. To the residue add dilute ammonium hydroxide. Warm; then add a very small fragment of secondary sodium phosphate. Crystals of ammonium magnesium phosphate separate.

The crystals of the ammonium magnesium phosphate separate as skeletons and hemimorphic forms of the orthorhombic system (see Ammonium).

It should be remembered that a number of elements are precipitated by phosphates in alkaline solution; the most frequently met with in the course of microchemical analyses, either in the substance to be tested, or present as reagents from previous tests, are, doubtless, lithium, members of the calcium and magnesium groups, trivalent metals, manganese, nickel, cobalt, tin, lead, silver, copper, and uranium.[2] Of these elements, lithium,

[1] Romijn, Zeit. anal. Chem., **37**, 300.

[2] Most of these elements will generally have been removed in the progress of the analysis before the addition of the sodium phosphate.

iron, manganese, cobalt and nickel form, with ammonium and phosphoric acid, salts of similar composition to, and isomorphous with, the magnesium salt.

The ammonium glucinum phosphate, ammonium zinc phosphate and ammonium cadmium phosphate are not precipitated in crystal form.

The advantage of employing modification II lies in the fact that owing to the presence of ammonium citrate, there is little danger of the interference of the elements listed above. If in following this method, the residue after evaporation is not completely soluble in the ammonium hydroxide solution, it is best, though not essential, to decant the clear liquid before adding to it the sodium phosphate.

Reactions I and II work equally well in the cold, but are then a trifle slower. Generally, an amorphous precipitate is at first produced which begins to crystallize in a few seconds. The formation of merely an amorphous precipitate must never be taken as evidence of the presence of magnesium.

In the presence of phosphates the detection of magnesium becomes quite difficult, particularly if other elements are present which form phosphates insoluble in ammonium hydroxide. If arsenates are also present, a still further complication arises, for, as we have already seen, double ammonium arsenates of calcium, zinc, etc., are formed, which are isomorphous with ammonium magnesium phosphate.

Of course it may happen that in some cases the mere addition of ammonium hydroxide will cause the separation of characteristic crystals of ammonium magnesium phosphate. Generally, however, it is first necessary to remove the phosphoric acid. This can be accomplished by tin and nitric acid, or by means of ammonium tungstate and nitric acid (see Phosphates, page 380).

Precautions.

In I, the reaction sometimes fails for lack of sufficient ammonium chloride, magnesium hydroxide being precipitated. A slight excess of this salt will do no harm.

Both modifications fail if there is an insufficiency of ammo-

nium hydroxide, for it should be remembered that there must be not only enough ammonium present to unite to form the proper compound, but that this latter salt will not separate save in alkaline solution.

It must also be borne in mind that the use of too strong ammonium hydroxide in excess so reduces the solubility of many salts as to cause their separation. Hence it is necessary to avoid, in reactions of this character, deciding too hastily as to the result of a test.

EXPERIMENTS.

a. Try modification I on a solution of $MgSO_4$, then try it on salts of Fe, Mn, Co, Ni, Al, Zn and Cd. Repeat the experiments, this time adding the HNa_2PO_4 before the NH_4OH.

b. Try modification II upon the same salts and combinations used in *a*.

c. Make mixtures, trying various combinations of the above with members of Groups I and II.

ZINC.

Crystal Forms and Optical Properties of Common Salts of Zinc.

A. ISOTROPIC.

B. ANISOTROPIC.

Hexagonal.

Tetragonal.

Orthorhombic. — Chromate; sulphate.[1]

Monoclinic. — Acetate; potassium-zinc sulphate.

Triclinic.

DETECTION.

A. By Means of Ammonium Mercuric Sulphocyanate.

Apply the reagent by Method *I*, page 251.

This reagent furnishes us with one of the best and the most generally useful methods for detecting the presence of zinc, copper, cadmium and cobalt, and will also furnish evidence of the presence of iron, silver, lead and gold.

[1] If formed in the presence of ferrous sulphate, monoclinic.

For the qualitative examination of simple salts and alloys it leaves little to be desired, but in the analysis of minerals, it is better to employ the carbonate test first, then corroborate with the sulphocyanate reagent.

Upon adding a rather concentrated solution of the reagent to a dilute solution of the metals listed above the following results are obtained:

Zinc yields an almost instantaneous precipitation of the compound $Zn(CNS)_2 \cdot Hg(CNS)_2$[1] in pure white feathery crosses and branching feathery aggregates. These skeleton crystals, when thick, appear black by transmitted light and snow white by reflected light. The normal crystal of the double sulphocyanate of zinc and mercury is said to be a right-angled prism of the orthorhombic system, but under the conditions which obtain in ordinary practice, only skeleton and dendritic forms will be seen.

Neither magnesium nor aluminum interfere with this test, save that when magnesium is present in very large amount, the separation of the zinc salt is retarded, and that aluminum under similar conditions renders the skeleton crystals of the zinc salt somewhat less feathery.

When zinc alone is present the crystals, as has been stated above, are snow white and of the form described; but if copper is present in minute amount, the crystals of the zinc salt are colored chocolate brown without undergoing any change of form. These brown crystals begin to appear after the white ones have separated. More copper than sufficient to yield the brown tint produces black crystals of modified form; still a greater proportion of copper completely changes the appearance of the crystals, and jet black spheres and botryoidal masses result. Finally a point is reached where crystals of copper mercuric sulphocyanate predominate, accompanied by the black crystals just mentioned. In all cases, however, because of the much lower solubility of the zinc compound than that of the

[1] This salt is generally given as anhydrous. Recent work seems to throw some doubt upon this and to indicate the presence of one molecule or less of water of hydration.

other complex salts formed, there will always be formed some of the typical uncolored zinc mercury sulphocyanate.

Copper alone yields beautiful branching dendrites and radiating masses of acicular prisms, yellowish green in color. The reaction is sensitive and beautiful and constitutes one of the most satisfactory tests available for the identification of copper.

The change in color due to the solid solution of the copper salt $Cu(CNS)_2 \cdot Hg(CNS)_2 \cdot H_2O$, in the zinc salt is a most interesting one and one for which no really satisfactory explanation is yet at hand.

The cobalt salt enters into the zinc salt in solid solution to yield light blue crystals. With very small amounts the color is exceedingly faint and the crystal form unchanged, but as the proportion of cobalt increases, the skeleton crystals of the zinc salt become deeper and deeper blue, simpler, less feathery, and gradually assume the color and appearance of the normal cobalt mercuric sulphocyanate. As in the case of the copper-zinc compound, these blue crystals are doubtless cases of solid solution, but the theory of isomorphous mixture is more tenable in this case than in that where copper is present.

Cobalt alone yields deep blue-black orthorhombic prisms, $Co(CNS)_2 \cdot Hg(CNS)_2$, usually imperfectly developed and uniting to form star-like clumps and radiating masses. This constitutes a valuable method for differentiating cobalt from nickel, since nickel yields no double sulphocyanate crystals under the conditions which obtain in microchemical testing.

Small amounts of zinc in the presence of much cobalt cannot be detected by this reagent.

Cadmium yields $Cd(CNS)_2 \cdot Hg(CNS)_2$ in brilliant colorless, probably orthorhombic prisms, usually several times as long as broad but the appearance of these prisms varies with the conditions which obtain at the time of their formation, as, for example, the concentration, depth of the test drop, amount of reagent added, acidity, etc. These variations are, however, not of a kind to render the test doubtful, long prisms, either singly or in groups being the rule.

Even a small amount of cadmium destroys the feathery and

branched character of the skeletons of the zinc-mercury sulphocyanate, owing to the formation of mixed crystals, and there generally results crystallites of the shape of an arrowhead. Small amounts of zinc in the presence of much cadmium will usually escape detection.

Much nickel modifies the crystals of the double zinc salt in the same manner as cadmium. With much nickel and very little zinc only spherulites are obtained.

The presence of both copper and cobalt in a solution containing zinc gives rise to the formation of mixed crystals of very peculiar color and form. These peculiarities are accentuated when cadmium is also present. The experienced worker thus will have little difficulty in detecting a number of elements in one single operation.

Manganous salts in excessively concentrated solutions containing a trace of free sulphuric acid yield crystals closely resembling those of the cadmium double salt.

Ferrous compounds, if only in very small amount, do not interfere with the formation of the typical crystals of the zinc salt but in high per cent there will usually be obtained radiating groups or feathery dendrites closely resembling the copper salt.

Ferric salts always yield a pink or red color and have no effect upon the zinc compound until a concentration is reached such that a deep blood red color appears. Under such conditions the zinc-mercury sulphocyanate first separates as a deep reddish brown salt, jet black by transmitted light, yet still retaining the typical feathery drendritic form, but in a few seconds these undergo a sudden and remarkable change into masses of curving branching filiform crystals. This is especially marked in test drops containing sodium or ammonium acetate.

Lead, unless present in large amount, usually seems to have little or no effect on the zinc reaction. Under some conditions it seems to interfere, however, and it is, therefore, always best to first remove the lead by means of dilute sulphuric acid. Add the acid, decant or filter; evaporate the clear solution to dryness; fume off the free sulphuric acid; dissolve in water; add ammonium acetate, and test as above.

Silver gives with the reagent a white amorphous precipitate, soon crystallizing in the form of small, thin, slender prisms with square or oblique ends, somewhat resembling those of the cadmium-mercury salt, but very much smaller than the latter. In the presence of silver the test for zinc is sometimes masked. In such an event, first remove the silver with hydrochloric acid, and test, after evaporation, in the usual manner.

EXPERIMENTS.

a. Apply the reagent, in the manner indicated, to solutions of pure Zn salts of different degrees of concentration.

b. Try in turn pure salts of Cd, Cu, Co, Ni, Ag and Pb.

c. To a Zn solution add a very little Cd and test. Repeat the experiment, using more Cd.

d. In like manner try mixtures of Zn and Cu; Zn and Co; Zn and Ni; Zn and Fe; Zn and Mg; Zn and Al; Zn and Pb; Zn and Ag.

e. Then try more complex mixtures, as, for example: Zn, Cd and Cu; Zn, Cd and Co; Zn, Cu and Co; etc.

In each case prepare several slides under different conditions and note well the changes in the appearance in the crystals which separate.

B. *By Means of Primary Sodium Carbonate.*

Apply a *large* drop of a saturated solution of the reagent by Method *I*, page 251, to a neutral or *very slightly* acid drop of the material to be tested.

An amorphous precipitate of what is doubtless a basic carbonate of zinc is usually at first formed and may persist unless the reagent is in large excess; in the latter case, after a few minutes, a double carbonate of zinc and sodium separates at the periphery of the drop. The crystals of this salt are constant and peculiar to zinc. No other element yields compounds of like appearance. The salt has the formula $3\ Na_2CO_3 \cdot 8\ ZnCO_3 \cdot 8\ H_2O$ (Deville). It takes the form of tiny colorless triangles and tetraheda or three-pointed or five-pointed agglomerates or rarely short stout prisms with pointed ends. The characteristic form upon which to base a decision are the triangles or tetrahedra. The crystals cling tenaciously to the glass, rendering decantation easy. After the removal of the mother liquor the double carbonate can be dissolved in acid and subjected to other tests.

It is unfortunate that this, which is one of the most characteristic as well as delicate of the microchemical tests for zinc, should be open to many difficulties. The chief of these lies in the fact that many elements are precipitated as carbonates, and that these often bulky precipitates interfere with or mask the zinc reaction. Among the interfering elements, those most frequently met with are doubtless calcium, strontium, barium, magnesium, cadmium, lead, iron, manganese, cobalt and nickel. Of this list, calcium, strontium, barium and lead will probably have been removed by previous treatment with sulphuric acid. Zinc may be separated from the remaining elements of this list by treating with ammonium hydroxide and hydrogen peroxide and finally extracting with a drop or two of moderately concentrated sodium hydroxide solution. To this clear extract primary sodium carbonate is added.

Schoorl has pointed out that the best results are to be obtained from acetic acid solutions of zinc to which normal sodium carbonate is added. This method is unquestionably the best in the analysis of complex mixtures and when the per cent of zinc present is low. The Behrens method of direct addition of primary carbonate is restricted to simple salts of zinc or to mixtures known to contain no interfering elements.

If only a very small amount of cadmium is present, it is precipitated before the zinc, and by avoiding the addition of an excess of the reagent, decanting the clear liquid and adding to the decanted liquid a fresh portion of the reagent in sufficient quantity, the zinc can be precipitated as the double carbonate. When considerable cadmium is present this method is not feasible. In such an event recourse may be had to ammoniacal solutions, as suggested by Behrens. The test drop is made strongly ammoniacal and to it primary sodium carbonate is added. Cadmium is immediately precipitated, while the zinc remains in solution. The clear solution is decanted at once. After a few seconds zinc separates from the decanted solution as the double carbonate in the forms described above. Some little skill and experience is generally necessary in order to obtain good results.

Precautions.

Salts of ammonium must be absent or present only in small amounts.

The separation of typical crystals is always slow and cannot safely be hastened.

It is essential that an excess of the reagent be employed. Failure not infrequently results from a neglect of this precaution. This is particularly true if the test drop is acid. Because of the necessity of adding large amounts of primary sodium carbonate, the test drop must be of greater volume than is usual in microchemical testing.

EXPERIMENTS.

a. Try precipitating Zn in acid, neutral and ammoniacal solutions.

b. Test mixtures of Zn and Cd, first in neutral, and then in ammoniacal solutions.

c. Experiment with Zn in the presence of the interfering elements noted above.

C. By Means of Oxalic Acid.

The reagent is applied by Method *I*, page 251; see Calcium, Method *B*, page 291, Strontium, Method *B*, Barium, Method *B*, pages 295 and 298.

Zinc yields $ZnC_2O_4 \cdot 2\ H_2O$ as small double spherulites, as pseudo-octahedra singly or united in twos, and as thin rhombs. The great majority of the crystals separating usually have their angles rounded. It is rare that a preparation is obtained giving clear-cut crystals.

These crystals, when examined with a low power, often bear a striking resemblance to the oxalates of calcium and strontium; therefore to avoid error the alkaline earths should first be removed.

Cadmium gives clear colorless monoclinic prisms and tabular crystals of the formula $CdC_2O_4 \cdot 3\ H_2O$. The prisms are usually very long and show a marked tendency to form large X's, and radiating aggregates. From concentrated solutions octahedral crystals are also obtained. The typical prisms of cadmium oxa-

late are seen only when working with comparatively pure salts. In the presence of cadmium the oxalic acid test for zinc is unreliable.

Magnesium salts must be absent, for under certain conditions a double magnesium-zinc oxalate in hexagons and more or less irregular plates will separate.

From a number of other precipitated oxalates, zinc oxalate may be separated by dissolving it in ammonium hydroxide and decanting from the insoluble precipitate. Upon evaporation the ammoniacal solution will deposit zinc oxalate, but no longer in the typical form described above, but as masses of radiating curving needles. Unfortunately this method is not applicable in the presence of magnesium and cadmium.

Precautions.

The solution to be tested should be neutral or only slightly acid, and rather concentrated with respect to zinc.

Lead, silver, copper, cobalt, nickel, iron, aluminum, manganese and chromium interfere with the detection of zinc by means of oxalic acid. They should first be removed if reliable results are to be obtained.

As stated above, zinc oxalate may be confused with the oxalates of calcium and strontium, while magnesium and barium seriously modify its characteristic appearance.

EXPERIMENTS.

a. Test a pure salt of Zn in dilute and in concentrated solution. Repeat the experiments, substituting Cd for the Zn.

b. Make a preparation of $ZnC_2O_4 \cdot 2\,H_2O$; draw off the supernatant liquid, add NH_4OH; warm gently and study the preparation. Prepare slides of different degrees of concentration.

c. Recrystallize $CdC_2O_4 \cdot 3\,H_2O$ in the same manner as the Zn salt.

d. Test mixtures of Zn and Cd.

e. Recrystallize the mixed oxalates from NH_4OH.

f. Make mixtures of Zn and the interfering elements listed above. Treat the precipitated oxalates with NH_4OH. Then try Cd in the same manner.

g. Try precipitating Zn with HKC_2O_4; $K_2C_2O_4$; $(NH_4)_2C_2O_4$. Then try Cd in like manner.

D. By Means of Sodium Nitroprusside.[1]

Apply the reagent by Method *I*, page 251, to a neutral or slightly acid solution.

Zinc yields a nitroprusside of low solubility in the form of spherical grains, botryoidal masses or tiny circular disks of a very faint brownish color. Upon standing, a large number of distinct faces develop upon the spheres (combination of cube and dodecahedron ?). These crystals are isotropic. The formula of the compound has not yet been established; that of the reagent can be written $Na_2 \cdot NO \cdot Fe\,(CN)_5 \cdot 2\,H_2O$. If the zinc merely replaces the sodium, we should obtain $Zn \cdot NO \cdot Fe\,(CN)_5 \cdot xH_2O$, or, on the other hand, we may be dealing with a sodium-zinc nitroprusside. In the presence of free mineral acids there is a tendency for zinc nitroprusside to separate in tiny squares and stout prisms or in fusiform rods.

A moderate amount of free mineral acid does not appear to prevent the reaction but retards the appearance of the crystals. Much acetic acid (or acetates) retards the separation even more. Heat hastens the reaction, but warming does not appear to be of value in obtaining a better development of the crystal form.

Cadmium yields tiny rough globulites, octahedra with rough, corrugated or even bristling faces, and drusy masses. Cadmium nitroprusside polarizes strongly and the largest of the crystals exhibit brilliant polarization colors.

Mixtures of zinc and cadmium yield rough globulites, most of them anisotropic.

Manganous salts give globulites similar in all respects to those obtained with zinc; they appear later and rarely develop to as large a size or exhibit the many faces. Like the zinc salt they are isotropic. In ordinary routine analysis it is practically impossible to distinguish between zinc and manganese.

Copper yields an immediate amorphous pale blue precipitate. Often this shows a tendency toward the formation of star-like skeleton crystals. Mixtures of copper and zinc yield, in addition to an amorphous precipitate, the spherical grains of the zinc salt, but in this case there is a tendency toward spherulites, tiny

[1] Bradley, Am. J. Sci., **22** (1906), 326.

bristling masses and tiny crosses and stars, closely resembling the forms obtained with cadmium. They differ, however, from the cadmium salt in that they do not polarize.

Nickel gives a light green amorphous precipitate; cobalt a similar pink one; while iron, if heated, yields a yellow deposit.

Mercurous salts (nitrate) give a gelatinous amorphous mass of a yellowish tint.

Mercuric salts and those of silver, lead, tin, antimony, bismuth, aluminum, magnesium and the alkaline earths appear to give no precipitates and to yield no crystals even in concentrated solution or upon evaporation.

Precautions.

The solution should be neutral or but faintly acid and should be moderately concentrated with respect to zinc.

If no result is obtained upon the first test, make a second, employing a considerably greater amount of the unknown substance.

Heating the preparation hastens the reaction.

If a precipitate is obtained, zinc, cadmium, copper, nickel, cobalt, iron or manganese are present and, conversely, if no precipitate appears, these elements must be absent.

Sodium nitroprusside is thus a convenient group reagent.

EXPERIMENTS.

a. Try the reagent upon several different concentrations of Zn.
b. Try with Cd, then with mixtures of Zn and Cd.
c. Try salts of Cu, Ni, Co, Mn, first as pure salts, then as mixtures with Zn.

CADMIUM.

Crystal Forms and Optical Properties of Common Salts of Cadmium.

A. ISOTROPIC.

B. ANISOTROPIC.

Hexagonal. — Iodide, ammonium-cadmium bromide; ammonium-cadmium chloride; potassium-cadmium chloride.

Tetragonal.
Orthorhombic. — Bromide.
Monoclinic. — Acetate; chloride; sulphate.
Triclinic.

DETECTION.

A. By Means of Ammonium Mercuric Sulphocyanate.

Read Method *A*, Zinc, page 307.

The prismatic crystals of $Cd(CNS)_2 \cdot Hg(CNS)_2$ are, in a similar manner to the zinc salt, colored a faint chocolate brown by traces of copper. This brown color intensifies with an increase in the amount of copper. When considerable copper is present, the copper double salt first separates, since it is slightly less soluble than the cadmium compound; then mixed crystals form, in which the copper apparently predominates over the cadmium. These mixed crystals are of a deep bluish green color. By this time most of the copper and but little of the cadmium have been precipitated, and the concentration has also reached such a point that the cadmium double salt begins to separate in the crystal forms described on page 309. These are, however, still mixed crystals, for they are colored brown by the small amount of copper still in solution.

As in the case of the zinc reaction, iron may sometimes color the cadmium salt a reddish brown.

Cobalt colors the cadmium salt blue. Much cobalt gives an intense blue color and alters the crystal form.

Magnesium and aluminum have even less effect than in the case of zinc.

Before testing for cadmium with the sulphocyanate reagent, it is best to first remove any lead or silver which may be present.

If a small amount of zinc is also present, mixed crystals containing zinc and cadmium first separate, whose crystal form can be described as non-feathery skeletons; soon after this the cadmium double salt separates in its typical form. In order that this sequence shall be brought about, it is best to employ a solution somewhat more dilute than when zinc is known to be absent. Much zinc usually prevents the formation of any of the

prismatic crystals of the cadmium salt, only mixed crystals resulting.

Precautions.

Cadmium salts of the organic acids, as, for example, cadmium acetate, fail to yield a satisfactory test. It is therefore best to evaporate the unknown with nitric acid and drive off the excess of acid before adding the sulphocyanate reagent. It follows that the addition of sodium or ammonium acetate to very acid solutions to lessen the effect of the mineral acid is in this case unwise. It is better to evaporate to dryness.

B. By means of Oxalic Acid.

Read Method *C*, Zinc, page 313.

The typical crystals of cadmium oxalate $CdC_2O_4 \cdot 3\,H_2O$ consist of long, clear, colorless, monoclinic prisms, singly, in X's, or in clusters. The obliquely truncated ends constitute a distinctive feature.

Manganous oxalate $MnC_2O_4 \cdot 3\,H_2O$ separates in groups of radiating prisms, which the careless observer sometimes confuses with the cadmium salt or vice versa. The ends of the prisms of the two salts are quite different however in appearance.

C. By Means of Sodium Nitroprusside.

See Zinc, Method *D*, page 315.

MERCURY.

Crystal Forms and Optical Properties of Common Salts of Mercury.

A. ISOTROPIC.

B. ANISOTROPIC.

Hexagonal.

Tetragonal. — Mercurous bromide, chloride and iodide; mercuric cyanide; red mercuric iodide.

Orthorhombic. — Mercuric bromide; mercuric chloride; yellow mercuric iodide.
Monoclinic. — Mercurous and mercuric nitrates.
Triclinic.

DETECTION.

A. As Metallic Mercury by Sublimation.

Heat upon a piece of platinum foil or upon a glass slide a little anhydrous sodium carbonate until all the moisture it contains has been expelled, cool, powder and mix a very small amount with a little of the material to be examined — transfer to a small tube of hard glass not over 2 millimeters in internal diameter, thin-walled and sealed at one end. Jar the mixture down so as to obtain clean walls. Heat gently over the flame of a Bunsen burner turned down to a flame 1 centimeter high. The mercury compound will be decomposed and tiny globules of metallic mercury will condense upon the walls of the tube. Examine under the microscope. With a stiff hair or glass rod drawn down to a hair gently rub the ring of sublimate. Examine again. The mercury will have united into larger globules.

Introduce into the tube two or three small fragments of iodine. Then insert the open end of the tube into a piece of cork; warm the iodine very gently and set the tube aside for a few minutes. Yellow and red mercuric iodide will be formed. Warming again will hasten the reaction and cause the sublimation of some of the mercuric iodide. Rectangular and rhombic plates and dendritic masses of both the vermilion colored iodide and the yellow modification will be obtained.

No other known element gives a reaction even remotely resembling this one.

From large volumes of liquid the mercury may be removed by acidifying with hydrochloric acid and dropping in a steel needle around which has been wound a tiny spiral of thin gold foil. The deposited mercury amalgamates with the gold. The electrolytic couple is lifted out after some time, washed, the gold foil removed, dried, placed in a subliming tube and the mercury expelled by heating. The sublimate is then characterized as above.

From drops containing moderate amounts of mercury, the metal may be separated by a fragment of magnesium, or it may be deposited upon a bit of copper. If in the latter case the spot of deposit be rubbed it becomes silvery white. If the coated copper is placed in a subliming tube and heated the mercury will be volatilized and will condense in characteristic globules.

EXPERIMENTS.

a. Test several mercurous and mercuric salts by heating them with Na_2CO_3. Examine the sublimates. Rub them gently with a hair-like glass rod and note that the globules unite.

b. Obtain a deposit of Hg upon a tiny bit of Cu foil — 1 millimeter by 3 millimeters — by heating in a drop of a solution of an Hg salt acidified with HCl. Dry and sublime.

c. Introduce a fragment of iodine in one or more of the tubes, warm gently and allow to stand about five minutes. Examine for crystals of HgI_2.

B. Differentiating between Mercurous and Mercuric Salts.

Add Hydrochloric Acid. — With mercuric salts there is no precipitation. Mercurous salts give an immediate amorphous precipitate of a white chloride HgCl. Under unusual conditions and exceedingly dilute solutions, mercurous chloride may sometimes be obtained in the form of slender needles. To characterize the white precipitate, draw off the supernatant solution and add to the residue a drop of dilute ammonium hydroxide. A black compound of the formula NH_2Hg_2Cl is immediately formed. Examined with a $\frac{1}{4}$ inch or an 8 millimeter objective the black compound is seen to consist of a mass of tiny acicular crystals, tiny squares, crosses and fusiform grains.

EXPERIMENTS.

a. Precipitate HgCl, examine with the microscope.

b. Add NH_4OH to the white precipitate and examine again.

Add Potassium Bichromate and Nitric Acid. — To the drop to be tested add nitric acid. Place nearby, a drop of solution of bichromate. Warm the drops over the micro-flame and while

hot cause the bichromate to flow into the test drop. Mercurous salts yield characteristic crystals. Mercuric salts do not.[1]

There are generally formed with mercurous salts a number of different compounds. There first separates a dark red granular precipitate, soon changing into dark red crosses, bundles of irregular crystals and peculiar dendrites and skeleton masses. Later yellow crystallites appear.

In any given test the appearance of the precipitate both as to crystal form and color will depend upon the concentration of the drops, the degree of acidity and the temperature.

Mercuric salts give no such precipitates and no crystalline compounds will appear unless the preparation is allowed to evaporate practically to dryness. There will then appear light yellow feathery dendritic and radiating branching moss-like masses.

Lead yields slender yellow monoclinic prisms, seldom grouped in masses. This element unless present in excess does not appear to seriously interfere with the test for mercury.

Silver separates in dark red pleochroic plates and scales which may often mask the mercury compounds.

EXPERIMENTS.

Test as above both mercurous and mercuric salts with and without HNO_3 present in both cold and hot solutions.

C. Add to a Drop of the Material a Tiny Fragment of Potassium Iodide. — See Method *III*, page 252. Mercuric salts yield vermilion colored mercuric iodide; mercurous salts a heavy bright yellow amorphous precipitate somewhat resembling lead iodide in color but instead of being in plates always agglutinated in a formless mass.

With mercuric salts we obtain one of the best and most satis-

[1] Bichromate added to hot unacidified $HgCl_2$ solutions causes the separation on cooling of hard star-like masses of crystals. According to Millon (Ann. chim. phys. (3) **18**, 388) this compound has the formula $HgCl_2 \cdot K_2Cr_2O_7$. Ammonium bichromate gives orthorhombic six-sided prisms of the compound $HgCl_2 \cdot 3(NH_4)_2Cr_2O_7$.

factory tests for mercury. At the moment the potassium iodide strikes the drop a white or pinkish cloud appears, rapidly changing to yellow then to brilliant red. The mercuric iodide HgI_2 first formed is very soluble in excess of the reagent forming the soluble compound $HgI_2 \cdot 2\,KI$. The precipitate therefore appears as an ever-widening circle about the fragment of solid reagent until the latter is completely dissolved. If the outer edge of the brilliant red circle is now examined with a moderately high power it will be seen to consist of tiny ruby red rhombs and rods together with more or less spherical masses and imperfect rosettes.

Precautions must be taken to avoid adding an excess of reagent; otherwise no permanent separation will take place. In order to avoid the possibility of error it is always well to add a fragment of copper sulphate, which will take up the excess of iodide and cause the separation of the mercuric salt.

EXPERIMENTS.

See under Lead, Method *A*, page 325.

D. Mercuric Salts can be detected through the Formation of Double Sulphocyanates.

This test is the reverse of that employed for the detection of Zinc (Method *A*, page 307); of Copper (Method *A*, page 339); or of Cobalt (Method *A*, page 366), to which the student is referred for details.

Add to a small test drop (which must not contain much free mineral acid) a fragment of ammonium sulphocyanate about the size of a pinhead. Stir until dissolved. Place next this drop a tiny drop of water in which is dissolved a very little zinc sulphate. Cause the test drop to *flow into the zinc solution*. Characteristic crystals of zinc-mercury sulphocyanate will appear.

Instead of zinc sulphate, copper sulphate or cobalt nitrate may be employed.

With simple mixtures, this test is a very beautiful one, but with complex material it is sometimes difficult to adjust the conditions especially as regards the quantity of ammonium sulphocyanate required.

EXPERIMENTS.

a. Test as above $HgCl_2$, using $ZnSO_4$.

b. Try again, this time introducing a trace of $CuSO_4$.

c. Try this test with $CuSO_4$ but with no $ZnSO_4$ present (which method is most satisfactory?).

LEAD.[1]

Crystal Forms and Optical Properties of Common Salts of Lead.

A. ISOTROPIC. — Nitrate (I).

B. ANISOTROPIC.

Hexagonal. — Iodide.

Tetragonal.

Orthorhombic. — Bromide; chloride;[2] sulphate; tartrate.

Monoclinic. — Acetate; chromate; sulphocyanate.

Triclinic.

DETECTION.

A. By Means of Potassium Iodide.

Apply the reagent, by Method *III*, page 252, to the test drop slightly acidified with nitric acid.

Lead iodide PbI_2 is at once formed as a bright yellow precipitate in a circular band about the reagent fragment. The circle gradually becomes larger and larger and at its outside circumference beautiful hexagonal plates appear. These plates and flakes of lead iodide appear greenish or brownish yellow by transmitted light, sometimes even gray, according to their thickness. By reflected light lead iodide plates glow and glisten and display the iridescent colors of thin films, an extremely characteristic feature of this salt.

These hexagons of lead iodide do not belong, according to

[1] Lead, silver and copper are introduced at this point rather than in their proper position in the Periodic System because of their close relations in qualitative analysis.

[2] Recrystallized from hot water $PbCl_2$ is pseudohexagonal.

Behrens, to the hexagonal system, as usually stated, but are probably only pseudohexagonal and in reality orthorhombic.

From neutral solutions containing lead in the form of lead acetate, potassium iodide will generally precipitate, in addition to the normal iodide, basic iodides of variable composition, such as $PbI_2 \cdot PbO$; $PbI_2 \cdot 2\ PbO$ (?).

Lead iodide can be recrystallized from hot water, best if acidified with nitric acid. On cooling, large, beautifully formed hexagons separate. A large drop of water is necessary in order that good results may be obtained.

Heated with hydrochloric acid lead iodide dissolves, and on cooling crystals of the normal iodide PbI_2, the normal chloride $PbCl_2$ and a chloriodide $PbCl_2 \cdot PbI_2$ or $2\ PbCl_2 \cdot PbI_2$ (or both) will separate. The chloriodides appear in the form of needles of a faint yellow color.

Silver iodide separates as a yellowish amorphous mass insoluble in hot water and in hot nitric acid.

Mercuric iodide takes the form of red rhombs. Mercurous salts acidified with nitric acid usually give in addition to the heavy precipitate of mercurous iodide the ruby colored rhombs of the mercuric salt.

If cuprous salts are present a white granular precipitate of cuprous iodide is formed and iodine is set free. Cupric salts will behave similarly.

Thallium is precipitated as an exceedingly fine granular precipitate.

Antimony and bismuth salts interfere with the reaction for lead. These elements yield with potassium iodide, double iodides which separate in neat, well-formed crystals. Solutions containing lead, antimony and bismuth, when treated with potassium iodide, yield a dark reddish brown, sandy precipitate wholly unlike in appearance anything obtained with the different elements alone. Boiling the mixed product with water will generally cause a partial decomposition, and on cooling hexagons and irregular plates of lead iodide will appear. In the presence of a little bismuth, lead iodide separates as orange red disks and plates, or the iodide scales may even appear crimson in color.

Precautions.

An excess of the reagent must be avoided, otherwise the precipitate at first formed will be dissolved because of the formation of a double iodide of the composition $PbI_2 \cdot 2\,KI \cdot xH_2O$.[1] Not infrequently colorless crystals of this double iodide will be seen in the immediate neighborhood of the reagent fragment. The addition of a drop of water will usually cause the decomposition of the double salt and a precipitation of the normal iodide.

Double iodides of lead with many elements are known, most of them crystallizing readily,[2] but it is not often that there will be a sufficient separation of these interesting salts to interfere in any way with the detection of lead.

Too much nitric acid in the water employed for recrystallizing the precipitate of lead iodide will cause partial decomposition and consequently the separation of colorless octahedra of lead nitrate.

EXPERIMENTS.

a. To a test drop containing $Pb(NO_3)_2$ add KI. Study the preparation, then add a drop of water and heat to boiling. After the drop has cooled, study it again. Repeat the experiment, but this time use an excess of KI. Try again in acidified solutions.

b. In like manner test a preparation of $Pb(C_2H_3O_2)_2$.

c. Make a preparation of $PbSO_4$. Decant the mother liquor, add to the sulphate residue a drop of water, acidify with HNO_3, then add a fragment of KI. After a few seconds examine the preparation.

d. Make a mixture of Pb and Ag, test with KI. Then try in turn mixtures of Pb and Sb; Pb and Bi; Pb, Sb and Bi; Pb and Cu; Pb and Sn.

e. Test a preparation of $HgCl_2$. Then one of $Hg(NO_3)_2$. Make a mixture of $Pb(NO_3)_2$ and $Hg(NO_3)_2$ and test.

B. By Means of Hydrochloric Acid.

Apply the reagent by Method *III*, page 252, to the test drop acidulated with a little nitric acid.

This method of adding the reagent is not so good as allowing two drops to flow together but is adopted so as to conform to that for testing for silver and mercury.

[1] Brooke, Ch. N., **1898**, 191.

[2] See Mosnier, Ann. chim. phys. (7) **12**, 374; Comptes rend., **120**, 444.

Lead chloride $PbCl_2$ separates at once in the form of characteristic, white, long acicular crystallites belonging to the orthorhombic system. There are also seen feathery dendritic X's and long irregular ragged prisms.

The appearance of the lead chloride separating varies with the concentration of the solution being tested and with the nature of the substances present. If the test drop is not sufficiently concentrated the lead chloride will not separate at once in the form of the characteristic crystallites, but will appear more slowly, prismatic forms being the rule. This question of concentration becomes a most important one if the substance contains salts with which lead chloride can unite to form double salts, as for example chlorides of the alkali metals and ammonium, for in such an event dilute or even moderately concentrated drops fail to yield recognizable forms. Indeed it may be said that testing for lead with hydrochloric acid is not advisable in the presence of members of Groups I and II.

In neutral solutions of lead acetate there may be precipitated in the presence of members of Group I and no excess of the reagent, colorless, highly refractive prisms of the formula $Pb(OH)Cl$ (n = 2.08 to 2.16) belonging to the orthorhombic system but sometimes also appearing as monoclinic prisms.

Lead chloride is slightly more soluble in water containing a *little* nitric acid than in pure water, hence the separation of lead as chloride is never complete.

Lead chloride differs from the chlorides of silver and mercurous mercury in being easily soluble in hot water, thus affording a simple method of separation. On cooling, the lead chloride no longer appears in the forms stated above but assumes that of thin pseudohexagonal prisms, rhombs and hexagons.

Recrystallized in the presence of Group I, double chlorides result, which generally separate more slowly. The crystal form is quite different from that of the normal salt. It is quite important that the student should be familiar with at least the double chloride of cesium and lead (cesium chloroplumbate), since this compound not infrequently makes its appearance when testing for tin with cesium chloride and is quite apt to puzzle the beginner.

Alkalies convert lead chloride into a basic chloride to which the formula $PbCl_2 \cdot 3\ PbO \cdot 4\ H_2O$ is generally assigned.

Thallous salts yield with hydrochloric acid star- and cross-like crystallites differing considerably from those given by lead. There is little danger of confusing these two elements, since recrystallizing thallous chloride from hot water, in which it, like lead chloride, is soluble, yields well-formed cubes.

In the presence of chlorides of antimony and bismuth complex chlorides of low solubility are sometimes formed, against which the analyst should be on his guard.

Silver gives an amorphous precipitate and mercurous salts a fine granular one without resolvable structure.

EXPERIMENTS.

a. To a drop of a concentrated solution of $Pb(NO_3)_2$ add a drop of dilute HCl in the manner described above. Make several other preparations varying the concentration of the test drops.

b. Recrystallize a preparation of $PbCl_2$ by heating to boiling with a large drop of water.

c. Recrystallize a preparation of $PbCl_2$ in the presence of NaCl, another in the presence of KCl; of NH_4Cl; of CsCl.

d. Test a solution of Pb and Sb. Then one of Pb and Bi. Then one containing all three elements.

e. To a preparation of $PbCl_2$ add a drop of NH_4OH.

C. Through the Formation of a Triple Nitrite of Lead, Copper and Potassium.

To the moderately concentrated neutral test drop add a trace of acetic acid, then a fragment or two of sodium acetate and of copper acetate. Stir. Then add a fragment of potassium nitrite.

There is formed the salt $K_2CuPb(NO_2)_6$ as tiny squares or rectangular plates, or tiny cubes and rectangular prisms which are brown by reflected light, jet black by transmitted light. The crystals appear to be isometric.

In this salt the potassium may be replaced by rubidium, yielding a compound of lower solubility, or by cesium which will give a salt of less and finally by thallium, one of least solubility and therefore the test of highest delicacy. These salts are probably

isomorphous. The size of the crystals obtained decreases as their solubility decreases.

This test is a most convenient one if alloys or substances suspected of containing both lead and copper are being examined. It is then only necessary to add to the solution, sodium acetate, potassium nitrite and acetic acid. If, after waiting a reasonable time, no triple nitrite separates, cesium chloride or thallous nitrate can be added.

The nickel salt also forms squares, rectangles and cubes but these are *light brown* by transmitted light *not black*.

Cobalt is immediately precipitated by potassium nitrite as a very insoluble double nitrite of potassium and cobalt in the form of a reddish brown powder, or in well-defined very tiny cubes and octahedra.

The triple nitrite may be written thus:

$$2\,KNO_2 \cdot Cu(NO_2)_2 \cdot Pb(NO_2)_2.$$

Precautions.

In very dilute solutions the test fails unless rubidium or cesium chlorides are added because of the too great solubility of the potassium salt. Concentration may sometimes yield the typical black crystals.

The addition of an excessive amount of potassium nitrite is objectionable because of the fact that the triple nitrite is quite soluble in solutions of this reagent. On the other hand, it is essential that the amount added be very slightly in excess of that called for by theory. It is therefore necessary to proceed somewhat cautiously. Add a tiny fragment of nitrite, then after waiting a few moments, if no crystals appear add a little more.

Too concentrated solutions of lead yield sandy black precipitates requiring recrystallization. Recrystallization can be effected by adding to the preparation a little water, a trace of acetic acid and a slight excess of potassium nitrite, then heating the preparation to boiling. Good crystals should appear on cooling.

Free mineral acids must be absent.

When the amount of lead is relatively great and cesium chloride

is added to increase the delicacy of the reaction a double chloride of cesium and lead is formed which separates simultaneously with or even before the triple nitrite.

EXPERIMENTS.

a. Test a preparation containing Pb.

b. Try another preparation, this time introducing RbCl.

c. Try again with CsCl.

d. By a series of careful dilutions determine the limit of the precipitation of Pb as the K salt, the Rb salt and the Cs salt.

e. Test a mixture of Pb and Ni; Pb and Co; Pb and Ag.

D. By Means of Metallic Zinc.

Apply the fragment of metal to the center of the drop to be tested; see Method *III*, page 252.

The characteristic appearance of the different metals when separated from their solution by an element higher in the electrochemical series is often quite sufficient to enable the analyst to identify it. The student is already familiar with these peculiarities through the experiments performed as outlined on page 254.

Lead yields beautiful long stiff many branching more or less fern-like dendrites, whose side arms are usually at right angles to the main stem or rib. Only portions of the formation show bright metallic reflections. The chief characteristic of the "lead tree" is a long fairly straight trunk or rib with side dendrites of irregular length.

Of "trees" formed by other metals that of silver most nearly resembles that of lead, but is more delicate, more branching, with side formations at angles other than 90 degrees and exhibits splendid silvery white metallic reflections.

Tin somewhat resembles silver but the side arms of the "trees" are very oblique and parallel one with another, that is, the parallelism extends *across* the main axis or rib. The reduction is slower with tin.

None of the remaining metals yield long loose fern-like or tree-like forms. Bismuth gives black and gray feathery and mossy dendrites with sharp-pointed ends with a characteristic curving tendency of the ends of the clusters. The mossy dendrites appear

jet black by transmitted light, grayish by reflection, their growth is rapid and vigorous, finally occupying the entire area of the drop, and is characteristic of bismuth. Antimony yields black mossy dendrites but rarely feathery or curving; they appear more granular in structure.

Copper separates as black, compact stout mossy masses with somewhat tabular or angular ends.

Cobalt resembles copper somewhat but forms dendrites less readily. Nickel can be made to yield a crystalline deposit only with great difficulty; only small mossy patches are usually obtainable.

Gold yields very compact mossy or granular dendrites and irregular botryoidal black masses which soon exhibit the characteristic golden yellow reflections of the metal.

Precautions.

To obtain the best results, the solutions should be practically neutral or only very slightly acid, otherwise the rapid evolution of hydrogen will cause the disintegration of the deposited crystal masses. If free mineral acid is present add sodium acetate.

Use only cold solutions.

Employ only a very minute fragment of zinc, otherwise the area of metal upon which deposition can take place is so great that really characteristic growths will not be obtained.

In general a moderate concentration is essential to the formation of satisfactory dendrites.

EXPERIMENTS.

If a number of elements have not already been tested under Method *III*, page 252, try a fragment of Zn in drops of solutions of salts of Pb, Bi, Sb, Sn, Cu, Cd, Pt, Au and Hg.

SILVER.

Crystal Forms and Optical Properties of Common Salts of Silver.

A. ISOTROPIC. — Chloride (I); bromide (I); iodide (I or H).

B. ANISOTROPIC.

Hexagonal. — Iodide;[1] secondary arsenate; secondary phosphate.

Tetragonal.

Orthorhombic. — Chromate; nitrate; nitrite; sulphate; potassium-silver iodide.

Monoclinic.

Triclinic. — Bichromate.

DETECTION.

A. By Means of Hydrochloric Acid.

Apply the reagent by Method *III A*, page 254, to the test drop previously acidulated with nitric acid.

If silver is present an immediate precipitate should result. Examine under the microscope. Silver chloride is so insoluble in water that it is thrown down as an amorphous mass. If the precipitate is wholly crystalline, either silver is absent or else present in very small amount. In order to identify silver in an amorphous precipitate it is necessary to recrystallize it. Before so doing it is always advisable, and often necessary, to first remove the solution from the precipitate and wash the latter. If the hydrochloric acid has been carefully added and the drop not stirred, it is easy to draw off the clear solution from the curdy, heavy precipitate of silver chloride. When the amount of precipitate is very small it is best to have recourse to the centrifuge to accomplish the separation. After removing the supernatant liquid, wash the precipitate once or twice with hot water acidified with nitric acid. The washed precipitate is then recrystallized from concentrated hydrochloric acid, or from ammonium hydroxide.

To the precipitate of silver chloride, at the corner of a slide, add a drop or two of concentrated hydrochloric acid, and heat the preparation over the micro-flame. If the precipitate is not completely dissolved, rapidly draw off the hot acid, without exercising any great care. On cooling, tiny crystals of silver chloride separate. Octahedral crystals predominate.

[1] Upon heating, AgI becomes isometric.

To the washed precipitate add one or two drops of strong ammonium hydroxide. After a second or two of contact, draw off the ammoniacal solution from any undissolved precipitate. Do not heat the preparation. Allow the preparation to stand. Almost immediately the drop becomes turbid around the edges, because of the separation of minute crystals of silver chloride; these crystals increase slowly in size, but are always very small, requiring a moderately high power for distinguishing their form. From ammoniacal solutions silver chloride seems to separate almost invariably in the form of cubes and hexagonal and rectangular plates. Only rarely are octahedral crystals obtained.

Of the two recrystallization methods, that with ammonium hydroxide will be found to be the better, as well as also the more convenient, because of the greater solubility of the precipitate in this reagent, and because the employment of ammonium hydroxide eliminates many interfering substances.

Lead chloride is precipitated in the form of white acicular crystals, irregular crystallites and X-like dendrites, soluble in hot water and therefore easily removed.

Mercurous salts yield a granular precipitate, but sometimes minute needles. Recrystallized from concentrated hydrochloric acid tetragonal crystals may be obtained but no cubes and part of the salt is converted into soluble mercuric chloride. Mercurous salts therefore interfere with the satisfactory detection of traces of silver by masking the tiny cubes of silver chloride.

Thallous salts yield cubes and stars.

Treated with ammonium hydroxide, silver chloride dissolves with the formation of the compound $AgCl \cdot 2NH_3$ (Isambert). If mercurous chloride is present the precipitate turns black under the action of the reagent, an insoluble compound being formed which Barfoed has shown to be a mixture of metallic mercury and the compound $Hg \cdot NH_2 \cdot Cl$. If, therefore, silver chloride is present only in traces in a precipitate consisting chiefly of mercurous chloride, ammonium hydroxide may dissolve practically no silver chloride, since the finely divided metallic mercury may reduce the greater part of the silver salt to metallic silver. (Silver follows mercury in the electrochemical series.) Under

such conditions it is necessary to exercise the greatest care in order to avoid missing the little silver which is present.

Elements forming oxychlorides may under exceptional conditions be precipitated with the silver.

It is also well to bear in mind that the addition of hydrochloric acid may force back the dissociation of certain salts to a degree causing the separation of a solid phase.

Precautions.

When working with concentrated hydrochloric acid or strong ammonia, great care must be used to avoid spoiling the microscope and objectives. It is essential to work rapidly.

The drop is acidified with nitric acid because the presence of this reagent favors the agglutination of the particles of silver chloride, and hinders at the same time the precipitation of oxychlorides, etc.

Decanting after precipitation is advisable, since the crystal form of silver chloride is changed by many compounds when the former is crystallized in the presence of the latter. Still other compounds completely ruin the test. Although there is, of course, danger of the occlusion of some of these objectionable salts by the silver chloride, this difficulty is reduced to a minimum by avoiding too concentrated test drops and washing the precipitate.

Washing the precipitated silver chloride with hot water removes the greater part of the lead chloride which may have been carried down with the silver.

EXPERIMENTS.

a. Precipitate with dilute HCl, a test drop containing $AgNO_3$. Separate and wash the precipitate; then recrystallize it by the above described method, using concentrated HCl. Then repeat the experiment, using NH_4OH as the solvent.

b. Make a mixture of Ag and Pb, test by both recrystallization methods.

c. In like manner test a mixture of $AgNO_3$ and $HgNO_3$.

d. Precipitate with HCl a test drop containing Pb and Ag; recrystallize the precipitate without drawing off the solution. In like manner test mixtures of Ag and Zn, Ag and Cd, Ag and Sb, Ag and Pt, Ag and Sn, Ag and Cu.

e. Try recrystallization of AgCl in the presence of phosphates, in the presence of sulphates and in the presence of molybdates.

B. By Means of Ammonium Bichromate.

Acidify the test drop with nitric acid. Add a fragment of the reagent at the center. Allow to stand a few seconds.

Dark red triclinic pleochroic crystals of the formula $Ag_2Cr_2O_7$ appear in the form of thin plates, having a rectangular or more or less symmetrical coffin-like outline. Aggregates of irregular broken scales are also abundant.

Insufficiently acidified drops or those which are very concentrated yield as the first crop of crystals, tiny rods or needles so dark colored as to appear black; after a time there will generally separate in addition to these rods, the characteristic plates and scales mentioned above.

Cold solutions of lead yield only a bright yellow amorphous precipitate. But from hot solutions, thin but long and slender monoclinic prisms are formed, not however of lead bichromate but having the composition $PbCrO_4$. Lead chromate is soluble in sodium hydroxide solutions.

Mercurous salts yield with ammonium bichromate, in solutions acidified with nitric acid, a number of different compounds (see Mercury) varying in composition and appearance according to the conditions which obtain. There is, however, little danger of confusing these salts with the silver bichromate, since they all appear as dark red crosses and bundles of irregular outline. These compounds may, however, seriously interfere with the recognition of silver if the latter is present only in traces. Mercurous chromate is insoluble in sodium hydroxide, a distinction from lead.[1]

Silver bichromate can be recrystallized from hot water, but better results follow the use of dilute nitric acid or of ammonium hydroxide. From hot nitric acid very beautiful preparations can be obtained. According to some investigators the crystals which separate on cooling from a hot neutral aqueous solution of the bichromate precipitate are not silver bichromate, but normal silver chromate Ag_2CrO_4.

Ammonium hydroxide dissolves silver bichromate with ease.

[1] If, however, only a minute quantity of sodium or potassium hydroxide is used, a red basic chromate of lead results.

The crystals separating from the ammoniacal solution are, according to some chemists, complex salts, containing one or more molecules of NH_3. The recrystallized product separates in the form of needles, skeleton crystals and masses resembling lichens.

Unless the original precipitation was made in nitric acid solution both strontium and barium may, under unusual conditions, be precipitated. It is well to bear this in mind when recrystallizing from ammonia.

In the presence of much lead the reaction often fails. Instead of the dark red salt, small yellow prisms of entirely different appearance separate. In such an event either first remove the lead with a drop of dilute sulphuric acid and then add the bichromate, or else add, immediately after the fragment of the reagent, a drop or two of dilute sulphuric acid. Usually in a short time good crystals can be obtained. The use of sulphuric acid in connection with the bichromate complicates matters, since the crystals separating in the presence of the silver sulphate formed in the reaction may be either those of the salt $Ag_2Cr_2O_7$ or the salt Ag_2CrO_4; the latter compound is usually formed when the amount of nitric acid is small and that of silver sulphate large. Normal silver chromate is isomorphous with normal silver sulphate, normal silver selenate, and anhydrous sodium sulphate; all are to be referred to the orthorhombic system. Because of this isomorphism of the sulphate and chromate very interesting and instructive preparations may be obtained. Silver sulphate separates from solution generally in the form of highly refractive, transparent, colorless, rhombic octahedra, but in the presence of silver chromate these colorless octahedra increase in size, turn first yellow, and finally a more or less intense brownish red.

Normal potassium chromate added to neutral solutions of silver causes the precipitation of normal silver chromate; but when the test drop is first acidified with nitric acid the crystals separating probably consist of both the chromate and bichromate. When recrystallized from hot nitric acid the precipitate will usually consist of the bichromate alone. When ammonium hydroxide is the solvent employed to recrystallize the silver chro-

mate, the compound separating is thought to have the formula

$$Ag_2CrO_4 \cdot 4\ NH_3.$$[1]

Normal potassium chromate produces in neutral or slightly acid solutions of manganous salts sheaves and bundles of a cinnamon brown manganous chromate soluble in excess of acid. Bichromates cause no precipitates in solutions of manganous salts.

Precautions.

The test drop must be moderately concentrated with respect to silver.

When working with test drops acidified with nitric acid there is little danger of any interference by members of the calcium group.

Large amounts of the salts of the alkalies seem to have an injurious effect when but little silver is present.

In all analytical work it is safe to assume that the presence of any elements which are precipitated as chromate or bichromate in acid solution will interfere with the reaction for silver, particularly when such elements are in excess of the latter.

White alloys believed to contain silver can be tested for this element by drawing across them a streak of a solution of ammonium bichromate in nitric acid. The color of the streak is generally sufficient to indicate the presence or absence of silver, but if the streak of the reagent be examined under the microscope (best with an illuminating objective or some form of vertical illuminator) in the presence of silver the characteristic dark red crystals of silver bichromate will be easily distinguished.

EXPERIMENTS.

a. To a moderately concentrated neutral test drop add a fragment of $(NH_4)_2Cr_2O_7$. Then try K_2CrO_4.

b. Acidify test drops with HNO_3, then add the above reagents in turn.

c. Decant the mother liquor from a precipitated test drop and recrystallize the Ag salt by heating with H_2O. Try another preparation by heating with dilute HNO_3. Recrystallize a third portion of the Ag compound, using NH_4OH.

d. Make a mixture of $AgNO_3$ and $PbNO_3$, acidify with HNO_3, then add a drop or two of dilute H_2SO_4 and finally a fragment of $(NH_4)_2Cr_2O_7$.

[1] Ladenburg, Handwörterbuch, **10**, 713.

e. Repeat the last experiment, adding this time the $(NH_4)_2Cr_2O_7$ first, and then the H_2SO_4.

f. Test several different preparations containing mixtures of the Ca group and Ag.

g. Test a mixture of $AgNO_3$ and $HgNO_3$.

h. Make a rather concentrated neutral test drop of $AgNO_3$, add a tiny crystal of Na_2SO_4. Study the Ag_2SO_4, which soon separates. Then add to the preparation a fragment of $(NH_4)_2Cr_2O_7$. Note well all that takes place. If a selenate is at hand, substitute it in a new preparation for the Na_2SO_4.

C. By Means of Arsenic Acid.

The reagent is made by introducing into a drop of a dilute solution of arsenic acid a tiny drop of dilute ammonium hydroxide; stir.

Apply the reagent by Method *I*, page 251.

Silver arsenate Ag_3AsO_4 (hexagonal) in the form of a fine granular precipitate is immediately produced; later, thin plates and plate-like prisms appear. The majority of the crystals which separate have the appearance of hexagonal plates. Their color by transmitted light varies from a reddish yellow in very thin plates to reddish brown with a tinge of dirty violet or even deep black as the thickness of the crystal increases.

Crystallites bristling with long slender needles also abound.

Silver arsenate is insoluble in acetic acid, soluble in hot nitric acid and easily soluble in ammonium hydroxide. Good preparations can be obtained by recrystallizing from either of the latter solvents.

In case ammonium hydroxide is employed, the colorless solution resulting contains the compound $Ag_3AsO_4 \cdot 4\ NH_3$, as has been shown by Widman. This tetra-ammonia salt can be made to crystallize in the absence of air in colorless needles, but on coming in contact with the oxygen of the air they turn red. It follows from this that the crystals obtained by recrystallizing silver arsenate from ammonium hydroxide are doubtless of variable composition.

Although the crystals of silver arsenate are neat, well formed and characteristic, the reaction cannot be considered as a satisfactory one for silver because of the fact that most of the other metals usually associated with silver are also precipitated by

arsenic acid, thus seriously interfering with the test. Solution of the precipitated arsenate in ammonium hydroxide and drawing off will usually effect a partial separation at least, and yield a more satisfactory test, but on the other hand the rendering of the drop alkaline may lead to the separation of arsenates which are soluble in acids but insoluble in alkaline solution.

Arsenic acid applied as indicated may yield with calcium salts a separation of the compound $NH_4CaAsO_4 \cdot 6\,H_2O$, orthorhombic, isomorphous with the corresponding phosphate; the crystals appear as large envelope-like crystallites with more or less ragged edges. If the solution be dilute hemimorphic forms identical with those of ammonium magnesium phosphate are seen, but generally of a larger size. Strontium yields minute stars and crystalline grains; barium a dense amorphous precipitate.

Members of the magnesium group yield colorless crystalline double ammonium arsenates isomorphous with their double ammonium phosphates. Good crystalline compounds will be obtained with the alkaline earths and with the magnesium group only when considerable ammonium hydroxide has been added to the reagent or when the test drop is distinctly ammoniacal; under these circumstances the detection of silver as arsenate may be masked.

Although silver arsenate is of little value as an identity test for silver it is of considerable use in detecting arsenates.

Precautions.

The arsenic acid may be added directly to the test drop to either neutral or to weak nitric acid solutions, but the best and most uniform results seem to follow the procedure suggested above.

The amount of ammonium hydroxide added to the reagent drop must never be sufficient to neutralize all the arsenic acid and give rise to an alkaline solution.

Note.

It is of theoretical interest to consider in connection with the arsenic acid test for silver, the behavior of compounds of the

elements analogous to arsenic as shown by their position in the Periodic System. We find, for example, crystalline salts of silver with phosphorus, as silver phosphate; with antimony, silver antimonate; with vanadium, silver vanadates; with chromium, silver chromates; with molybdenum, silver molybdates. Of these salts the chromates and vanadates can be employed for the detection of silver, but the phosphates, antimonates and molybdates cannot be made to yield sufficiently characteristic results.

EXPERIMENTS.

a. Test a neutral solution of $AgNO_3$ in the manner suggested above.

b. Recrystallize a preparation of Ag_3AsO_4 from HNO_3.

c. Try another preparation with NH_4OH.

d. Test a mixture of Ag and Pb. Then one of Ag and Hg.

e. Try the above reaction on salts of Ca, Sr and Ba, first alone, then in mixtures but with no Ag present.

f. Try salts of Mg, Zn and Cd.

g. Try a salt of Ca in the presence of much NH_4Cl.

COPPER.

Crystal Forms and Optical Properties of Common Salts of Copper.

A. *ISOTROPIC.* — Cuprous chloride, bromide and iodide.

B. *ANISOTROPIC.*

Hexagonal.

Tetragonal. — Ammonium-copper chloride; potassium-copper chloride.

Orthorhombic. — Chloride; sulphate plus 4 NH_3.

Monoclinic. — Acetate; potassium-copper sulphate.

Triclinic. — Sulphate.

DETECTION.

A. By Means of Ammonium Mercuric Sulphocyanate.

The reagent is applied by Method *I*, page 251, to neutral or weakly acid solutions; it must be neither alkaline nor ammoniacal. The appearance, properties and peculiarities of copper mercuric

sulphocyanate have been discussed at length under Zinc on page 309, to which the student is referred.

To obtain the truly characteristic moss-like and radiating crystallites the drop being tested must contain but little copper. The double sulphocyanate is sufficiently soluble to require several minutes for its appearance in very dilute solution.

Since the zinc salt is much less soluble and possesses the property of adsorbing any copper present with a change of color from white through brown and black, a little zinc acetate or sulphate added to the drop to be tested before the reagent is applied will greatly increase the delicacy of the reaction. Infinitesimal percentages of copper may be thus detected.

The sulphocyanate test is the most satisfactory and generally useful identity test for copper we possess.

EXPERIMENTS.

These have already been performed under Zinc.

B. By Means of the Triple Nitrite Reaction.

When copper alone is to be tested for, proceed as follows: To the moderately concentrated drop add a fragment or two of sodium acetate if free mineral acid is present, if not add a tiny drop of dilute acetic acid, next add a fragment of lead acetate and stir until dissolved. Finally add a fragment of potassium nitrite. The black triple nitrite of potassium, copper and lead $K_2CuPb(NO_2)_6$ which is formed has been described under Lead, page 327 (q.v.). By adding rubidium, cesium or thallous salts the delicacy of the reaction may be greatly increased.

If nickel is present it will separate as a triple nitrite of similar composition $K_2NiPb(NO_2)_6$, light yellow or yellow-brown, in squares and cubes of larger size. They differ from the copper compound in never being black.

Cobalt is immediately precipitated as insoluble potassium cobalt nitrite.

In testing alloys or mixtures likely to contain lead, copper, nickel and cobalt, it is best to modify the above procedure. Sodium acetate is first added, then potassium nitrite followed by

acetic acid. Cobalt will immediately be precipitated. If lead and nickel or copper are present the yellow or black or both triple nitrites will eventually separate. If none appears, a little lead acetate is added; tiny black squares and cubes indicate copper.

Powerful oxidizing agents must be absent.

EXPERIMENTS.

a. Test for Cu in $CuSO_4$; in $Cu(NO_3)_2$.

b. Try the reaction in acid solution; in ammoniacal solution.

c. Try in like manner a mixture of Cu and Ni, Cu and Co.

C. Other Useful Reactions for Copper, which may arise in Testing for Other Elements.

Cesium chloride forms two very characteristic double chlorides with copper $CsCl \cdot CuCl_2$ in golden yellow rectangular plates, squares and short stout prisms and a less frequently met with orange colored salt of unknown formula. These characteristic double salts frequently appear when testing for tin, antimony, or bismuth with cesium chloride or on rare occasions when testing for aluminum. Ferric chloride also forms a yellow double chloride with cesium chloride. The color and the appearance of the cesium iron chloride is quite different from the copper salt and the combination does not take place so readily.

Potassium ferrocyanide in acetic acid solutions yields an amorphous red-brown precipitate. Added to ammoniacal solutions there appear after a time white dendrites of copper ferrocyanide ammonia $2\,(NH_3) \cdot Cu_2Fe(CN)_6$.[1] The addition of acetic acid causes these dendrites to become red.

ALUMINUM.

Crystal Forms and Optical Properties of Common Salts of Aluminum.

A. ISOTROPIC. — The alums (I).

B. ANISOTROPIC.

Hexagonal. — Sulphate; chloride ($6\,H_2O$).

Tetragonal.

[1] Behrens, Anleitung, p. 75.

Orthorhombic. — Nitrate (usually M).
Monoclinic. — Nitrate (or O).
Triclinic.

DETECTION.

A. By Means of Cesium Sulphate.

Apply the reagent by Method *III*, page 252.

Cesium alum $CsAl(SO_4)_2 \cdot 12\ H_2O$ separates in large, beautifully formed, brilliant, colorless octahedra, dodecahedra or in combinations of the cube and octahedron (isometric). Dendrites and many faced crystal aggregates are also frequent.

Test drops containing cesium alum have a great tendency to remain in a state of supersaturation. Often a single large crystal only will appear. In such an event, crushing the crystal and drawing its fragments through the drop will almost invariably yield a large crop of well-formed crystals.

Schoorl suggests keeping as a reagent a sample of pure cesium alum. When testing for aluminum he adds cesium sulphate (or chloride) and after concentration to about the point of supersaturation, the tiniest possible fragment of cesium alum is introduced into the preparation and instantly pressed upon and crushed with a platinum wire, thus seeding the drop and causing the immediate appearance of the alum crystals, providing of course that aluminum is present.

Testing for aluminum with cesium sulphate leaves little to be desired as to accuracy and elegance, but requires a little practice to learn just the proper concentration. Too dilute a test drop requires very long waiting. Spontaneous evaporation leads almost invariably to supersaturation. Evaporation over the micro-flame is very unsatisfactory. On the other hand, the addition of the reagent to too concentrated a test drop gives rise to the immediate formation of dendritic masses and skeleton crystals. It is true that the experienced worker will usually at once recognize these dendrites as due to the presence of aluminum, but in view of the fact that beautiful and far more characteristic crystals can be obtained, the worker should not be satisfied with malformed crystals.

In the presence of magnesium sulphate there is formed a double sulphate of magnesium and cesium; hence in dealing with such cases it is necessary to add a sufficient amount of cesium sulphate to permit of the formation of both the cesium magnesium sulphate and the cesium alum. It is very seldom that the cesium magnesium sulphate separates; when it does the crystals are to be referred to the monoclinic system.

Manganous sulphate will likewise form a double sulphate with cesium sulphate separating in monoclinic crystals.

Cesium alum is one of a group of double sulphates known as "alums," having the general formula $M_2(SO_4)_3 \cdot N_2SO_4 \cdot 24\,H_2O$, where —M— can be Al, Cr, Mn, Fe, In, Ga, Tl; and —N— Na, K, Rb, Cs, NH_4, Ag, or Tl. All alums are isomorphous, and are to be referred to the isometric system. Theoretically, therefore, one would be led to expect that the presence of elements capable of taking the place of aluminum in alums would be liable to interfere with the test for aluminum. But in addition to their property of being able to replace aluminum in these double sulphates, we must consider the crystallizing power of the compounds formed. It is herein that lies the explanation of the value of cesium sulphate over and above that of any other of the sulphates we might be inclined to select. Of the above listed alum-forming elements, aluminum is the only one which unites with cesium or rubidium sulphates to form *easily crystallizable* alums. The other elements unite with these two sulphates only with difficulty, and the alums formed can be regarded, from a microchemical standpoint, as difficultly crystallizable. Sodium, potassium and ammonium sulphates readily unite to form more or less crystallizable alums with the other alum-forming elements as well as with aluminum.

Not infrequently it will be found that cesium alum has a marked tendency to adsorb various substances which may be present, leading to a modification of the crystal form or to colored solid solutions.

Precautions.

Although it is obvious that in the case of simple compounds converted into sulphates it is merely necessary to add the reagent

and allow the preparation to crystallize, it is essential that due regard be paid to (1) just the right concentration, (2) the absence of much free sulphuric acid, (3) the absence of other free mineral or organic acids, (4) the absence of colloidal substances.

To avoid most of these difficulties it is always advisable to proceed as follows: To the drop to be tested add ammonium hydroxide in slight excess, decant the solution and wash the gelatinous precipitate with water. Then add a drop of water and follow it with a very little dilute sulphuric acid, *only just enough* to dissolve the aluminum hydroxide. Warm gently; cool, and to the drop add a fragment of the reagent. After a few seconds, beautiful large crystals of cesium alum separate.

Cesium chloride can be employed as reagent, providing that the solution to be tested contains a little free sulphuric acid. The chloride is, however, not as satisfactory as the sulphate, particularly in the hands of beginners, for cesium chloride crystallizes in the isometric system, thus sometimes leading to confusion. Cesium sulphate, on the contrary, crystallizes in the orthorhombic system. An examination of a preparation containing the latter salt, between crossed nicols, will therefore permit of an easy differentiation between crystals of cesium sulphate and those of cesium alum.

If cesium sulphate is not at hand it may be prepared from the chloride in this manner: Place a drop of sulphuric acid at the corner of a slide or on platinum foil; add a small crystal of cesium chloride and evaporate to dryness. If no fumes of sulphur trioxide escape, add another drop of acid and heat again. It is evident, that by this method of treatment, in the majority of cases, it is in reality primary cesium sulphate that is formed, and not the normal sulphate as implied above. Care must therefore be exercised in its use.

The difficulties often experienced with this test by the beginner are generally due to too much sulphuric acid in dissolving the aluminum hydroxide and to too much acid in preparing the cesium sulphate.

EXPERIMENTS.

a. To a test drop consisting of a solution of $Al_2(SO_4)_3$ add a fragment of the reagent.

b. Precipitate another drop with NH_4OH, decant, wash the precipitate, dissolve in the least possible amount of H_2SO_4 and test.

c. Try Rb_2SO_4 as reagent; then K_2SO_4; Na_2SO_4, $(NH_4)_2SO_4$. Try CsCl.

d. Test for Al in the presence of free HCl; free HNO_3.

e. Test preparations containing Al and Fe; Al and Cr; Al and Mn; Al, Fe and Cr; Al and Mg; Al in the presence of phosphates.

f. Prepare slides of chrome alum, iron alum, etc., then mixtures of these various alums; note isomorphism.

B. By Means of Ammonium Fluoride.

See Method *XV*, page 268. Apply the fluoride in solid form (Method *III*).

Use a celluloid object slide.

From neutral solutions or those containing at the most only a trace of free mineral acid a double fluoride separates having the formula $3\,NH_4F \cdot AlF_3$ or considering this to be an alumino-fluoride its formula may be written $(NH_4)_3AlF_6$. It crystallizes in very tiny clear-cut colorless octahedra belonging to the isometric system.

Alumino-fluorides of the same formula of potassium, rubidium, cesium and sodium are known; they are even less soluble than that of ammonium and therefore can be obtained only in such minute crystals as to be useless as a test. Lithium alumino-fluoride is also very insoluble.

The ammonium, potassium, rubidium and cesium salts are isometric and form isomorphous mixtures; but the sodium salt is monoclinic.

In these alkali fluorine compounds the aluminum can be replaced by titanium, chromium, iron and vanadium. But in the case of zircono-fluorides, silico-fluorides (see page 279) and plumbo-fluorides the salts have the composition M_2RF_6, where M is an alkali metal and R may be Zr, Si or Pb.

Crystalline double fluorides of aluminum with copper, nickel and zinc have been described, but these are too soluble to appear under the conditions which usually obtain in an analysis.

Precautions.

Employ only neutral solutions.

Always have an excess of ammonium fluoride, for if not a compound of different formula results appearing as very tiny rods, worthless as an identity test for aluminum.

Salts of lithium, sodium and iron must be absent.

The presence of silicon and analogous elements will generally seriously complicate matters, and may ruin the test, owing to the formation of silico-fluorides, etc. (See ammonium silico-fluoride tests, under sodium and barium.) Aluminum silico-fluoride is gelatinous, and does not crystallize.

Testing for aluminum with ammonium fluoride generally yields results a trifle quicker than Method *A*, but the delicacy of the reaction is very little greater. Moreover, Method *B* is subject to many complications and interferences, and there is always danger, in spite of great care, of damaging objectives by the corrosive vapors arising from the test drop, since objectives of moderate power and therefore short working distance must be employed. For these reasons, testing with ammonium fluoride cannot be considered as being as satisfactory as the cesium sulphate method. One of the chief reasons for inserting the test in this series is the fact that crystals of ammonium alumino-fluoride may occasionally appear when ammonium fluoride is being employed for other purposes, and the presence of aluminum is not suspected.

The method of testing for aluminum by heating with ammonium fluoride in a platinum cup has been described under Method *XV*, page 270 (q.v.). The results thus obtained are in most cases somewhat more reliable than those given above but require more time, patience and care.

TIN.

Crystal Forms and Optical Properties of the Common Salts of Tin.

A. ISOTROPIC. — Tetraiodide (I); potassium chlorostannate (I).

B. ANISOTROPIC.

Hexagonal.

Tetragonal.

Orthorhombic. — Tetrabromide.

Monoclinic. — Stannous chloride + 2 H_2O; stannous fluoride, stannic chlorides.

Triclinic.

DETECTION.

A. By Means of Cesium Chloride.

Apply reagent by Method *I*, page 251.

In testing for tin it is best to evaporate to dryness repeatedly with moderately concentrated nitric acid, thus converting the element into the insoluble dioxide. The dry residue is extracted repeatedly with dilute nitric acid to remove interfering elements and finally dissolved in aqua regia and the excess of acid removed by evaporation. Dissolve the moist residue in water. There is thus obtained a compound which we may term chlorostannic acid,[1] with which cesium salts yield an immediate precipitate of cesium chlorostannate Cs_2SnCl_6 in the form of tiny colorless highly refractive regular octahedra and cubes. Rubidium gives a similar compound of greater solubility and therefore yielding larger crystals, but of sufficiently high solubility to render the separation of the crystalline phase too slow to be of practical use. These three chlorostannates are isomorphous. The ammonium salt is more soluble than the above and the presence of ammonium compounds is therefore objectionable; the same is true of sodium which yields $Na_2SnCl_6 \cdot 5\,H_2O$.

Both iron and copper are apt to be adsorbed by the tin oxide, in such an event yellow or red double chlorides of copper or iron and cesium will eventually make their appearance. Occasionally if much iron is present the crystals of cesium chlorostannate are colored yellow.

Lead if present may give octahedra of cesium chloroplumbate Cs_2PbCl_6.

[1] This compound may also be regarded as a hydrated stannic chloride. If evaporated to dryness there will be obtained $SnCl_4 \cdot xH_2O$, where x is 3, 5 or 8. All three salts are crystalline and all can be referred to the monoclinic system.

As already noted antimony gives hexagons and bismuth rhombs of the corresponding chloroantimonate and chlorobismuthate.

In the event of no precipitate appearing after some time, add a fragment of potassium iodide. This may lead to the formation of cesium iodostannate Cs_2SnI_6 of less solubility than the chlorostannate. The iodo-compound separates in yellow cubes and octahedra.[1]

In the case of simple salts or mixtures it is usually sufficient to convert into chlorides by evaporating with hydrochloric acid; then dissolve in water, acidulate with hydrochloric acid and add the drop of cesium chloride solution. But in such an event one must remember that double chlorides of Sb, Bi, Cu, Fe, Al, Zn, Cd, Pb, etc., will almost invariably separate if present.

If much tin is thought to be present use rubidium chloride in preference to cesium chloride.

Note. — It is of considerable theoretical interest to note that in the compounds of the type just considered M_2RCl_6, M_2RBr_6 and M_2RI_6, M may be K, Rb, Cs, (NH_4) and R may be Se, Te, Sb, Pb, Sn, Pt, Ir, Os, Pd, Ru. All salts of this series are isomorphous (Groth).

EXPERIMENTS.

Defer until Bi is being studied.

ARSENIC.

Crystal Forms and Optical Properties of Common Salts of Arsenic.

A. ISOTROPIC. — Trioxide (I, also, but rarely monoclinic).

B. ANISOTROPIC.

Hexagonal. — Triiodide; silver arsenate (secondary, normal is I ?).

Tetragonal. — Secondary potassium arsenate.

Orthorhombic. — Calcium-ammonium arsenate; magnesium-ammonium arsenate.

[1] It is probable that the product actually obtained is a solid solution of Cs_2SnI_6 in Cs_2SnCl_6.

Monoclinic. — Primary ammonium arsenate; primary sodium arsenate.

Triclinic.

DETECTION.

A. Through the Formation of Arsine and its Reaction with a Crystal of Silver Nitrate.

Use the distilling tube, Fig. 133, page 248, as a generator, as indicated in Figs. 138 and 139.

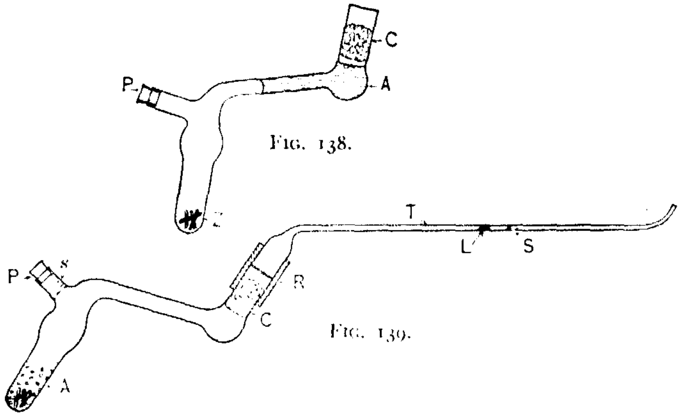

FIG. 138.

FIG. 139.

Apparatus for the Detection of Arsenic.

Fit the side tube with a plug of *soft* wood P. Introduce two or three fragments of arsenic-free zinc Z, and through a pipette dilute hydrochloric acid A (the acid will not flow into the lower part of the tube until the plug P is loosened). Insert a loose plug of absorbent cotton C which has been soaked in lead acetate and dried. The plug P is next withdrawn. The acid is allowed to flow upon the pure zinc; a tiny drop of water *s* is introduced into the side tube and the plug reinserted. This drop makes a tight seal and prevents loss of gas. The tube is now tipped downward and a tube drawn down to a capillary and containing loosely a tiny crystal S of silver nitrate and one L of lead acetate is attached by means of a short piece of rubber tube R. From time to time the crystal S is examined to see if it changes color. If after some minutes S remains clear and colorless remove P, insert the material to be tested by means of a bit of drawn-out

glass tubing or a fragment of solid may be pushed in by means of a platinum wire. Close the tube by means of a drop of water and the plug P. The reaction may be hastened by warming A over the micro-flame. If arsenic is present the crystal of silver nitrate turns yellow due to the formation of a compound believed to have the composition $AsAg_3 \cdot AgNO_3$, and rapidly changes to black through the reduction to metallic silver. The lead acetate remains unchanged unless hydrogen sulphide is evolved.

In acid solution antimony will yield stibine which reacts upon silver nitrate in a similar manner although the yellow compound is practically never seen. Phosphine or hydrogen sulphide turn the silver nitrate black at once, but the sulphur compounds should have been held back by the lead acetate cotton. The crystal *L* is introduced merely to make sure that any blackening of S cannot be due to volatile sulphur compounds.

To differentiate between arsenic and antimony we may substitute fragments of aluminum for the zinc and a solution of potassium hydroxide for the acid. Under these conditions, no stibine is evolved, only arsine passes off with the hydrogen. Metallic antimony is precipitated in part and deposited in part upon the aluminum.

In place of a crystal fragment of silver nitrate we may employ a fragment of mercuric bromide or a textile fiber soaked in mercuric bromide and dried; in the latter case a much finer capillary tube can be used and the delicacy of the reaction is somewhat increased. Arsine turns mercuric bromide red or brown.

B. By Reduction to Metallic Arsenic and Subsequent Oxidation to Arsenic Trioxide.

The powdered material is mixed with a small quantity of dry anhydrous potassium ferrocyanide and introduced into a thin walled tube of hard glass drawn down to a point and fused. The tube is tapped gently to cause all the material to collect in the tip of the tube. Heat the material gently at first and finally raise the temperature to a red heat. The arsenical compound is reduced; arsenic is set free and condenses upon the walls of the tube as a brownish mirror. Antimony will yield a black or metallic mirror; mercury a sublimate of tiny silvery spheres. Certain compounds of carbon or sulphur may yield deposits upon the

glass closely resembling the arsenic mirror. It is therefore essential to carry the test a step farther; to this end, cut off the closed tip of the tube and heat the mirror over the micro-flame. The arsenic will be vaporized and oxidized, collecting upon the cool walls as As_2O_3 in the form of glistening colorless highly refractive (n = 1.755) isometric crystals in the form of octahedra or as derivatives of the octahedron. These crystals are soluble in potassium hydroxide solutions and are precipitated therefrom in the form of octahedra by strong nitric acid.

ARSENATES.

By Means of Silver Nitrate.

Apply reagent by Method *I*, page 251, to the ammoniacal drop. This reaction has already been discussed at length under Silver, Method *C*, page 337.

By Means of Zinc Chloride in Ammoniacal Solution.

To the test drop add ammonium hydroxide, then apply the zinc chloride by Method *I*, page 251.

Ammonium zinc arsenate $NH_4ZnAsO_4 \cdot 6\,H_2O$ separates in the same forms as those described for ammonium magnesium phosphate (q. v.) with which it is isomorphous, as also with the compound $NH_4ZnPO_4 \cdot 6\,H_2O$; but the crystallites of the ammonium zinc arsenate are more feathery than those of the ammonium magnesium phosphate. Phosphates must be absent.

ARSENITES.

By Means of Silver Nitrate.

Apply the reagent by Method *I*, page 251, to the ammoniacal drop.

Lemon yellow silver arsenite is immediately precipitated first as an amorphous mass, later crystallizing in a variety of forms. The first crystals appear as exceedingly tiny acicular crystals in masses, stars and crosses, later as fusiform grains, and still later as thin rods with notched ends, or long irregular acicular prisms. Eventually some oxidation takes place and there will appear crystals of silver arsenate. Silver arsenite is soluble in acids and in ammonium hydroxide, hence the amorphous precipitate partially redissolves.

EXPERIMENTS.

a. Test by Method *A* the following: solutions of As_2O_3; of $NaAsO_2$; of H_2KAsO_4; one drop of commercial H_2SO_4; one drop of commercial HCl; trying first the $AgNO_3$ crystal and then the $HgBr_2$ fiber.

b. Test the above compounds by Method *B*.

c. Test the same compounds with $AgNO_3$; and finally with $ZnCl_2$.

ANTIMONY.

Crystal Forms and Optical Properties of Common Salts of Antimony.

A. ISOTROPIC.

B. ANISOTROPIC.

Hexagonal. — Red tri-iodide; strontium-antimonyl tartrate; lead-antimonyl tartrate.

Tetragonal. — Barium-antimonyl tartrate (T or O).

Orthorhombic. — Yellow tri-iodide (O or M); barium-antimonyl tartrate; potassium-antimonyl tartrate; sodium-antimonyl tartrate.

Monoclinic. — Antimonyl chloride.

Triclinic.

DETECTION.

A. By Means of Cesium Chloride.

Apply reagent by Method *I*, page 251, to the drop acidified with hydrochloric acid.

A double chloride of cesium and antimony of the formula $2\ CsCl \cdot SbCl_3 \cdot 2\frac{1}{2}\ H_2O$ separates in hexagons and elongated six-sided plates. Many of the hexagons show a system of straight or curving ribs extending from the center to the angles of the hexagons.

Bismuth yields rhombs or long plates showing an hexagonal outline, and having a lower solubility than the antimony salt.

Copper yields a series of double chlorides varying in color from bright yellow to deep red. These salts usually separate in rectangular prisms, but the red compound sometimes assumes forms closely resembling the iodo-compounds referred to below.

Tin causes the immediate precipitation of tiny regular octahedra of the formula Cs_2SnCl_6, a salt of chlorostannic acid.

Cesium chloride has remarkable powers of forming more or less difficultly soluble double chlorides with a large number of elements and we may thus expect to often find in preparations to which cesium chloride has been added an abundant crop of well-formed crystals, whose origin is puzzling unless we know what elements are present.

The cesium chloride test is made more satisfactory and much more sensitive by obtaining an iodo-salt instead of that described above. This is accomplished by adding a fragment of potassium iodide to the test drop after applying the cesium chloride. Crystals of a double iodide of cesium and antimony having the same form as the double chloride are obtained but they are deep orange yellow or orange red instead of colorless. The composition of these crystals is not well established, but the weight of evidence seems to be that three molecules of CsI unite with two or three molecules of SbI_3, rather than with SbI_4.

The test thus performed is an excellent one, but requires considerable experience in order to properly control the conditions. The test drop must be neither dilute nor concentrated and only just sufficient hydrochloric acid should be present to prevent an antimonyl compound from forming. It is also better to adopt for this iodide modification the method of applying the reagents suggested by Schoorl,[1] namely adding a fragment of cesium chloride to one side of the drop and a fragment of potassium iodide to the opposite side.

The double iodide of bismuth separates in rhombs and elongated hexagons, rarely in the regularly formed hexagons of the antimony salt. Their color is a deeper orange (or even a red) than that of the antimony double iodide.

Tin forms yellow cesium iodostannate in regular octahedra.

Precautions.

When iodine separates it is an indication that too small an amount of potassium iodide is present.

In the event of a precipitate resulting upon the addition of hydrochloric acid at the beginning (Ag, Pb, Hg, Cu) sufficient acid should be added to complete the reaction. Decantation or

[1] Beiträge z. mikrochem. Anal. Wiesbaden 1909, p. 49.

filtration should then be resorted to and the clear solution carefully concentrated to remove the excess of acid until a drop of water causes a precipitate of antimonyl (or bismuthyl) chloride. Then *very carefully* add hydrochloric acid with thorough stirring, until the precipitate *just dissolves*.

EXPERIMENTS.

Defer until Bi is being studied.

ANTIMONATES.

The composition of the various antimonates commercially available appears to be quite uncertain. The only one of importance is the potassium salt sold variously as potassium antimonate, metantimonate or pyroantimonate; it usually conforms fairly closely to the formula $H_2K_2Sb_2O_7 \cdot 6\ H_2O$. It is difficultly soluble even in boiling water.

Sodium salts in neutral solution yield, with antimonates of this type, very insoluble sodium pyroantimonate, separating as tiny lenticular grains or larger fusiform crystals singly or uniting in more or less globular masses. From dilute solutions what appear to be tetrahedra, octahedra or rectangular prisms are formed. Although appearing to be isometric the crystals are to be referred to the tetragonal system.

Magnesium salts in neutral solution yield $H_2MgSb_2O_7 \cdot 9\ H_2O$ first as an amorphous precipitate, later crystallizing in thin transparent colorless hexagonal plates, and as small, irregular spherulites. Occasionally stars or rosettes or short hexagonal prisms are obtained. The magnesium salt is dimorphic, being either hexagonal or monoclinic according to conditions.

Of the two tests that with sodium is the more satisfactory.

If it is necessary to neutralize a test drop in testing for antimonates use potassium carbonate.

Ammonium salts interfere with the sodium and magnesium tests.

BISMUTH.

Crystal Forms and Optical Properties of Common Salts of Bismuth.

A. ISOTROPIC.

B. ANISOTROPIC.

Hexagonal. — Sulphate (9 H_2O).
Tetragonal. — Bismuthyl chloride.
Orthorhombic.
Monoclinic.
Triclinic. — Nitrate (?); bismuthyl nitrate.

DETECTION.

A. The Addition of Water to neutral or very faintly acid solutions followed by the formation of a heavy white amorphous or granular precipitate should lead to the suspicion of the presence of bismuth. From the chloride, the compound $BiOCl$ is obtained and from the nitrate $BiONO_3 \cdot H_2O$.

B. By Means of Potassium Sulphate.

This test has been discussed at length under Sodium, Method *B*, page 276, and also under Potassium, Method *B*, page 284, to which the student is referred for details.

Neither arsenic, antimony, nor tin yield a crystalline deposit. The test is therefore one of the most satisfactory for the recognition of bismuth, providing lead is absent. Lead yields a granular or amorphous (or rarely crystalline) precipitate with potassium sulphate. It is therefore necessary to first remove the lead by precipitating with sulphuric acid in the presence of nitric acid before proceeding to test for bismuth. With this end in view add to the solution to be tested nitric acid, then a drop of very dilute sulphuric acid — if no precipitate results, evaporate until fumes of sulphur trioxide are formed. Then proceed as described under Method *II*, page 252, Experiment *a*. If a precipitate forms with the sulphuric acid decant, centrifuge or filter the solution to remove the lead, after which evaporate with sulphuric acid and proceed as above.

C. By Means of Cesium Chloride.

This test has already been discussed under Antimony, Method *A*, page 352.

The only specific difference between the double chlorides of these two elements is that with bismuth there is a greater tendency toward rhombic plates. Conversion into double iodides gives a salt darker colored than that with antimony.

A great excess of hydrochloric acid seriously reduces the delicacy of the reaction, while nitric and sulphuric usually prevent the separation of typical crystals.

The student must bear in mind the caution given under antimony that cesium chloride has a strong tendency to form double salts, especially with lead, copper, cadmium, zinc, aluminum, etc.

EXPERIMENTS.

a. Try CsCl upon a solution of Sn in HCl.

b. Try the test upon Sb in HCl solution; upon Bi in HCl solution.

c. Try converting the chloro-salts of these three elements into the iodo compounds.

d. Try testing for Sb and Bi in turn in the presence of a little Cu.

e. Try mixtures in which some of the other metals are present which form crystallizable double chlorides with CsCl.

D. Other Important Tests.

With Primary Potassium Oxalate. (See Manganese, Method *A*, page 359.)

With Ammonium Bichromate. (See Silver, Method *B*, page 334.)

CHROMIUM.

Crystal Forms and Optical Properties of Common Salts of Chromium.

A. ISOTROPIC. Chrome alums (I).

B. ANISOTROPIC.

Hexagonal.

Tetragonal.

Orthorhombic. — Barium chromate (or M); calcium chromate (or M); potassium chromate; silver chromate; sodium chromate; strontium chromate (or M); zinc chromate.[1]

Monoclinic. — Ammonium bichromate; ammonium chromate; barium chromate (or O); calcium chromate (or O); lead chromate; strontium chromate (or O).

Triclinic. — Potassium bichromate; silver bichromate;[2] sodium bichromate.

[1] In the presence of $FeSO_4 \cdot 7\,H_2O$ the salt separates monoclinic.

[2] $Ag_2Cr_2O_7$ dissolved in water decomposes into Ag_2CrO_4 and CrO_3.

DETECTION.

A. In simple salts we may obtain the following colors and reactions:

a. Soluble chromates are yellow, bichromates red, their solutions yellow. Solutions of chromium salts where chromium acts as a base, when heated in acid solution, are green.

b. Chromium yields with ammonium hydroxide a bluish or greyish green or greyish lavender hydroxide. In the presence of ammonium salts, especially ammonium chloride, this hydroxide is partially soluble with the formation of the compound $CrCl_3 \cdot 4\ NH_3$. Boiling drives off the ammonia and chromium is completely precipitated as $Cr(OH)_3$.

c. Silver nitrate gives in solutions weakly acid with nitric acid a characteristic deep red chromate with both chromates and bichromates (see Silver, Method *B*, page 334). In neutral solutions the bichromate yields a crystalline silver chromate somewhat more readily than the bichromate but the difference is too slight to be of any practical use in differentiating between the salts.

d. Alkali chromates *added to neutral solutions of manganous salts* give a characteristic manganous chromate, but alkali bichromates give no such reaction (see Manganese, Method *B*, page 360).

B. By Conversion into Cesium Chrome Alum.

To a drop of the solution to be tested add ammonium hydroxide. Should a reddish liquid result, boil. Decant the solution from the bluish or greenish precipitate. Wash the precipitate once or twice. Add a tiny drop of water and then very carefully the *least possible* amount of dilute sulphuric acid which will just dissolve the precipitate. Evaporate carefully nearly to dryness and add a tiny drop of water. Finally introduce near the center of the drop a fragment of cesium sulphate. Cesium chrome alum will almost immediately separate in characteristic alum crystals, the octahedron and dodecahedron predominating (isometric). These crystals have a faint bluish tint by transmitted light. The peculiar purple color of chrome alum will not be seen unless they attain a relatively large size and reflec-

tions from their faces become noticeable. To be of value as a test for chromium both the crystal form and color must be taken into account.

Free mineral acids should be absent, as also the salts of organic acids.

In general we must observe the same precautions as in testing for aluminum with cesium sulphate. (See Aluminum, Method *A*, page 342.)

It is obvious that other "alum" forming elements, such as aluminum, iron and manganese, must be absent or present only in traces.

Since all the alums are isomorphous it is often possible to start crystallization by introducing into the test drop an infinitesimal trace of potash alum when by chance the preparation shows a tendency to supersaturate and no crystals form, or even better, add a similar tiny fragment of cesium alum. In such an event we must place our chief dependence upon the *color* of the crystals separating.

EXPERIMENTS.

Test simple salts of Cr as described above, then employ more or less complex mixtures.

C. Detection of Chromium in Complex Mixtures such as Alloys, etc.

Method of Behrens.[1] — Place the finely-divided material on an object slide. Add a fair-sized drop of concentrated nitric acid, heat to boiling, decant the acid to another slide and treat the residue again in the same manner. Repeat until all is dissolved or until sufficient material has passed into solution. Unite all the drops and evaporate to dryness. By means of a tiny spatula carefully scrape off the dry mass into a platinum cup or upon a piece of platinum foil. Add a very small quantity of sodium carbonate-potassium nitrate fusing mixture (3 : 1) and heat until a clear fusion results, adding more fusing mixture if necessary, but being careful to ***use no more*** than absolutely necessary. The yellow fused mass is dissolved in water, concentrated

[1] Behrens, Anleitung, 1 Auf. 186.

to small bulk, acidified with acetic acid, a trace of sulphuric acid added and into the drop, a drop of silver nitrate is caused to flow. Silver sulphate will first separate in its characteristic form but will be colored yellow or red through the solid solution of silver chromate in it. Later the red-brown or blackish crystals of silver chromate appear.

EXPERIMENTS.

a. Look over notebook records of experiments made under Silver — Exps., Method *B*, page 336. Similar crystals will be obtained upon testing for Cr with $AgNO_3$.

b. Test for Cr in several different Cr compounds by Method *B*.

c. Test by Method *B* in Cr salts, mixed with Al, Fe, Cu, Ni.

d. Test for Cr in chrome iron.

MANGANESE.

Crystal Forms and Optical Properties of Common Salts of Manganese.

A. ISOTROPIC.

B. ANISOTROPIC.

Hexagonal.

Tetragonal.

Orthorhombic. — Potassium permanganate.

Monoclinic. — Acetate (ous); chloride (ous); ammonium-manganous sulphate; potassium-manganous sulphate; sodium-manganous sulphate.

Triclinic. — Sulphate (ous).

DETECTION.

A. With Manganous Salts Oxalic Acid or Primary Potassium Oxalate forms Characteristic Crystals of Manganous Oxalate.

Obtain a thin uniform film of dry potassium oxalate upon the slide; Method *IV*, page 255. Draw across this film the neutral solution of the material to be tested or a solution slightly acidified with acetic acid. Six-armed stars of $MnC_2O_4 \cdot 3\, H_2O$ separate. These stars result from the intersection of thin twinned prisms. They polarize strongly, extinguish parallel to their length and exhibit brilliant polarization colors.

This test is excellent when pure manganous salts are being dealt with, but is seriously affected by much alkali and ammonium salts or by the presence of those elements readily precipitated as oxalate, for example, the elements of Group VIII of the Periodic System, or those of Group II.

Free mineral acids seriously interfere.

With solutions highly concentrated with respect to manganese no reaction will be obtained nor will satisfactory results follow the use of too dilute test drops.

Silver, lead, mercurous and stannous salts should be absent.

EXPERIMENTS.

a. Test as above $MnSO_4$. Then try the addition of a drop of $H_2C_2O_4$ to a test drop by Method *I*, page 251.

b. Try effects of free acids upon the test.

c. Test mixtures of $MnSO_4$ with members of Group VIII.

B. *By Means of Potassium Chromate.*

Apply reagent to test drop by Method *III*, page 252.

Sheaves of yellowish brown, acicular, strongly pleochroic crystals separate from neutral or feebly acid solutions; but from drops containing a trace of free nitric acid stout dendritic masses and clusters of yellowish brown prisms are obtained. The test drop should be moderately concentrated.

Nitric acid greatly slows down the reaction and if present in more than traces prevents the formation of crystals. The other mineral acids behave in a similar fashion.

With pure manganous salts this test is excellent, but is of little value in the presence of silver, lead, mercury or in fact any element forming a difficultly soluble chromate.

See Silver, Method *B*, page 334; Mercury, Method *B*, page 321.

Potassium bichromate applied as above gives no crystalline precipitate.

EXPERIMENTS.

a. Test a drop of $MnSO_4$ with K_2CrO_4; with $K_2Cr_2O_7$.

b. Repeat the test, previously acidifying with HNO_3; with HCl; with $HC_2H_3O_2$.

c. Repeat in the presence of Ag, of Pb.

C. Through Fusion with a Mixture of Sodium Carbonate and Potassium Nitrate.

The fusion should be made in a small platinum cup or upon platinum foil, using the smallest possible amount of the fusing mixture which will react with the unknown. It is always wise to first obtain the hydroxide or oxide and employ this material for the fusion.

If manganese is present a green color is obtained, due to the formation of manganates of sodium and potassium Na_2MnO_4, K_2MnO_4.

Iron and chromium mask the reaction.

EXPERIMENTS.

a. Test several different Mn compounds by fusing on platinum foil or in a bead on Pt wire.

D. By Means of Phosphates in Ammoniacal Solution.

Manganous salts are precipitated as $NH_4MnPO_4 \cdot 6\,H_2O$. See Magnesium, Method *B*, page 304; Nickel, Method *B*, page 365; Cobalt, Method *C*, page 367.

The hemimorphic crystals obtained usually grow somewhat longer than those of magnesium but are otherwise identical. They are proved to be due to manganese by adding hydrogen peroxide which causes them to turn brown.

E. By Means of Sodium Bismuthate.

Dissolve the material in concentrated nitric acid and evaporate the solution to dryness. Dissolve in dilute nitric acid, add several small portions of sodium bismuthate, stirring after each addition, allow to stand a short time; a pink or purple color results with a precipitation of brown oxide of manganese. Next add *very carefully* in tiny fragments *just sufficient, no more,* sodium thiosulphate to dissolve the precipitated oxide. A colorless milky drop results; add a drop of nitric acid (1 : 4) and stir thoroughly. Now again add carefully and slowly a *very little* at a time sodium bismuthate. A beautiful pink or purple color is developed due to the permanganate formed.

To complete the test add a fragment of rubidium chloride, stir, add a drop of water and allow a drop of perchloric acid to flow into the drop. Crystals of rubidium perchlorate are immediately formed, taking up the permanganate in solid solution and yielding pink or purple crystals.

EXPERIMENTS.

Test this method first upon pure Mn salts, then upon mixtures of other elements with Mn.

IRON.

Crystal Forms and Optical Properties of Common Salts of Iron.

A. ISOTROPIC. Iron alums (I).

B. ANISOTROPIC.

Hexagonal. — Chloride (when sublimed).
Tetragonal.
Orthorhombic. — Ammonium-ferric chloride; oxalate (ous).
Monoclinic. — Sulphate (ous);[1] ammonium-ferrous sulphate; sodium-ferric oxalate; potassium-ferric oxalate.
Triclinic.

DETECTION.

A. By Means of Potassium Ferrocyanide.

To the test drop, apply a fragment of the reagent by Method *III*, page 252.

A dark blue precipitate or color indicates iron. The precipitate is soluble in alkalies, insoluble in acids. It is therefore always best to acidify with hydrochloric acid before adding the ferrocyanide.

The presence of much copper may seriously interfere with the test because of the formation of brown copper ferrocyanide.

[1] But if magnesium sulphate is present, orthorhombic.

EXPERIMENTS.

a. Test for Fe in simple salts.
b. Test in complex mixtures with other elements which will be precipitated by $K_4Fe(CN)_6$.

NICKEL.

Crystal Forms and Optical Properties of Common Salts of Nickel.

A. ISOTROPIC.

Ammonia nickel nitrate (I).

B. ANISOTROPIC.

Hexagonal.
Tetragonal.
Orthorhombic. — Sulphate.
Monoclinic. — Acetate; chloride; nitrate; sulphate; ammonium-nickel sulphate; potassium-nickel sulphate.
Triclinic.

DETECTION.

A. By Means of Dimethyl Glyoxime,

$$\begin{array}{l} CH_3 - C = NOH \\ \qquad\ \ | \\ CH_3 - C = NOH \end{array}$$

To a drop of the solution to be tested add ammonium hydroxide until in slight excess. Decant the solution of the hydroxides which have been dissolved by the ammonium hydroxide, from those which are insoluble. Close to the clear ammoniacal drop place a large drop of a freshly prepared saturated solution of dimethyl glyoxime. Cause the ammoniacal drop to flow into the reagent.

Nickel yields an immediate rose-pink or magenta-colored precipitate — at first amorphous in character, later changing into a felt of exceedingly fine acicular crystals. Near the edges of the crystalline mass tiny needles form in star-like and irregular bristling clusters. Often a yellow precipitate is first formed, changing only slowly into pink.

The nickel salt of dimethyl glyoxime has the formula

$Ni(C_4H_7N_2O_2)_2$. No other element yields a similar appearing compound.

The reaction is an exceptionally sensitive one; exceedingly small amounts of nickel may be thus detected save in the presence of large amounts of cobalt or copper. Neither cobalt[1] nor copper alone yield a precipitate, but both these metals mask or prevent the formation of the typical nickel compound; a yellow amorphous precipitate results in which can be found only a few masses of the pink needles.

Copper can be easily removed by deposition upon a piece of zinc foil prior to the addition of the ammonium hydroxide. This is accomplished by placing the weakly acid drop upon a clean bright piece of zinc. As soon as a black spot is formed the drop is decanted to a new position, and as soon as it is observed that the zinc is not at once stained the drop is decanted upon an object slide, ammonium hydroxide added and the test for nickel applied.

Cobalt may be removed by adding to the almost neutral drop, a fragment or two of potassium nitrite, warming to hasten solution, and then adding a drop of acetic acid. Potassium cobalt nitrite is precipitated. After a few seconds the liquid is decanted from the precipitate which clings tenaciously to the glass and ammonium hydroxide is added, ignoring any few tiny particles of the nitrite which may have been carried over. The glyoxime test can now be applied with assurance of detecting nickel if present.

An excess of neither silver nor zinc appears to influence the reaction for nickel.

Dimethyl glyoxime gives with iron salts a red color. In testing for nickel, therefore, we often obtain an indication of the presence of iron in spite of the fact that ammonium hydroxide has been added; for in the presence of ammonium salts the addition of ammonium hydroxide to ferrous solutions will not precipitate all the iron, owing to the formation of soluble double

[1] All the samples of cobalt salts sold as C.P. tested by the author have given a slight precipitate with the reagent, probably due to traces of nickel present in the material.

salts, such as $(NH_4)_2SO_4 \cdot FeSO_4$ or $2\ NH_4Cl \cdot FeCl_2$. Non-volatile organic acids prevent the precipitation of ferric hydroxide and the ferric salts thus remaining in solution will react with the glyoxime.

B. Other Tests for Nickel.

1. Triple nitrite of lead nickel and potassium $K_2PbNi(NO_2)_6$. See Lead, Method *C*, page 327; Copper, Method *B*, page 340.

2. Ammonium nickelous phosphate $NH_4NiPO_4 \cdot 6\ H_2O$. See Magnesium, Method *B*, page 304. This salt is isomorphous with the magnesium salt.

Note. — The addition of hydrogen peroxide causes no change in the color of the crystals of ammonium nickel phosphate, but will turn those of cobalt brown.

EXPERIMENTS.

a. Try the glyoxime reaction on salts of Ni in NH_4OH and in acid solution; and in different concentrations.

b. Try test upon Co compounds.

c. Make a mixture of Ni and Co and test.

d. Test for Ni in the presence of much Cu.

Remove the Cu from a drop by means of metallic Zn and test again. Then try the detection of Ni in the presence of much Fe.

e. Apply the phosphate test to a Ni salt and as soon as the crystals are well formed, allow a drop of H_2O_2 to flow into the drop. Repeat the process with a Co salt.

COBALT.

Crystal Forms and Optical Properties of Common Salts of Cobalt.

A. ISOTROPIC.

B. ANISOTROPIC.

Hexagonal.

Tetragonal.

Orthorhombic. — Ammonium-cobalt phosphate; purpureo-chloride (pseudotetragonal).

Monoclinic. — Acetate; chloride; luteo-chloride; nitrate; potassium-cobalt sulphate; roseo-chloride; sulphate.

Triclinic.

DETECTION.

A. By Means of Ammonium Mercuric Sulphocyanate.

See Zinc, Method *A*, page 307; Copper, Method *A*, page 339. Apply the reagent by Method *IV*, page 255.

Mercury cobalt sulphocyanate $Hg(CNS)_2 \cdot Co(CNS)_2$ separates as dark blue prisms, usually in irregular clusters. Its solutions have the tendency to supersaturate and it is therefore necessary to give the reaction considerable time, or even evaporation over the micro-flame may be advisable. Crushing the first crystals appearing near the circumference of the drop and drawing the fragments across often expedites the reaction.

Nickel yields no crystals and does not interfere unless in excessively great amount.

Precautions.

The test drop should be neutral or only slightly acid with acetic acid, but must not be alkaline.

Better results are to be obtained with mineral acid salts than with those of organic acids.

EXPERIMENTS.

The student should refer to his notes under Zn, where the results of his experience with the reagent upon Co should be found.

B. By Means of Potassium Nitrite.

To the neutral or slightly acid drop add a fragment of potassium nitrite. Stir. Then warm and add a drop of acetic acid.

Potassium cobalt nitrite $3\,KNO_2 \cdot Co(NO_2)_3 \cdot 1\frac{1}{2}\,H_2O$ is immediately precipitated in the form of tiny cubes, so minute as to simulate an amorphous or finely-granular deposit. These crystals appear black by transmitted light, yellow by reflected light. From hot solutions there may sometimes be obtained crystals recognizable as cubes and octahedra.

This test has its greatest value in a negative way since failure to obtain the very insoluble double nitrite may be considered as indicative of the absence of cobalt.

Upon obtaining a yellow precipitate, decant the supernatant liquid, convert the double nitrite into the chloride, nitrate or sulphate and test for cobalt by Method *A*.

EXPERIMENTS.

These have already been tried under Lead, Method *C*, page 329 (q.v.).

C. Other Tests for Cobalt.

As ammonium cobaltous phosphate $NH_4CoPO_4 \cdot 6\,H_2O$; isomorphous with the magnesium, nickel and manganese ammonium phosphates. See Magnesium, Method *B*, page 304.

Add hydrogen peroxide and warm. The cobalt compound turns brown.

THE QUALITATIVE ANALYSIS OF MATERIAL OF UNKNOWN BUT OF SIMPLE COMPOSITION.

The following brief outline is intended to serve as a guide to the steps to be taken in a preliminary analysis of inorganic materials. It is merely a suggestion of some of the many methods whereby we may obtain a rough idea of the nature of the material in question and may thus be enabled to more judiciously apply identification tests.

1. The substance is a liquid. Evaporate to dryness and study as below: remembering, however, that certain constituents may have been volatilized.

The material is a solid. Examine with a low power. Next study with crossed nicols.

If several components appear to be present, try to isolate them by using fine forceps; or a moistened platinum wire; or scrape off particles with a fine pointed knife or tiny chisel or tiny drill.

2. Heat a particle on the corner of an object slide or upon a nickel or platinum spatula. Note carefully its behavior.

3. Test for solubility in water; in HCl; in HNO_3. If *completely* insoluble in these solvents, treat as in 17 below. If the material is an alloy which may contain Sn evaporate repeatedly with HNO_3 to render the Sn insoluble.

4. If the material appears to consist of a salt or a mixture of salts soluble in water, try to obtain crystals from the aqueous solution and observe their habit and study their behavior with polarized light. Test for the acid radicals by the Bunsen-Treadwell system, pages 369-373. Test a drop of the aqueous solution with indicator fibers, page 261, both *before* and *after boiling*. *Note well what takes place. Not infrequently time may be* saved by testing for the acids before the bases.

5. When the material is insoluble in water, but soluble in HCl and HNO_3, a study of the crystalline salts formed upon evaporation is of less value than in the preceding case. But if the crystals obtained are isotropic, the analysis becomes very simple, since there are few isotropic chlorides and nitrates.

6. If the material is insoluble in water but soluble in HNO_3, it is obvious that the Bunsen-Treadwell system cannot be applied in its entirety for identifying the acid radicals. Recourse must be had to the Hinrichs system, page 373; or to separate carefully chosen identity tests.

7. To a drop of a weakly acid solution add a fragment of metallic Mg. Note whether the Mg becomes stained or coated with a crystalline deposit. To another drop add a fragment of metallic Sn. See page 253.

8. To a drop of a water or an acid solution of the substance add NH_4OH by Method *I*, page 251. Note whether a precipitate is produced and whether it is amorphous or crystalline. Test an amorphous precipitate by 9.

9. Always test the precipitate obtained by NH_4OH for Al, Mg, Fe, Mn, Cr, Sn, (Si). Take a portion, treat with HNO_3 and evaporate to dryness. Repeat several times to convert any Sn into the oxide. Dissolve any insoluble material in $HNO_3 + HCl$ and test for Sn with CsCl.

Test another portion with HNO_3 and a fragment of $KClO_3$ and heat to boiling. Mn will be precipitated as MnO_2, Cr will be oxidized to a chromate. Decant or filter. Test residue for Mn and solution for CrO_4.

10. To a drop of H_2O or HNO_3 solution add HCl: — Ag, Pb, Hg. Treat any amorphous precipitate with NH_4OH: — Ag, Hg.

11. To a drop of solution add dilute H_2SO_4. A crystalline precipitate indicates Ca, Ag, Hg; under certain conditions Sb, Bi may yield crystalline precipitates as may also a number of difficultly soluble stable salts. An amorphous precipitate indicates Sr, Ba, Pb. (Rarely all three of these elements yield crystalline precipitates.)

12. Evaporate to dryness a drop of the solution of the substance after acidifying with HNO_3. Dissolve the residue in a drop of water and add a drop of ammonium mercuric sulphocyanate reagent.

A crystalline precipitate Zn, Cu, Cd, Co, Ag, Pb, Au.

Amorphous precipitate, Pb, Ag.

Red or pink color, Fe.

(If the oxidation of Fe or Mn salts has not been complete, an amorphous or crystalline precipitate may be obtained, see page 310. Around the edges of the drops, crystals of the components of the reagent always eventually separate.)

13. To a very concentrated drop of the substance to be tested (which must not contain *free HNO_3) add a drop of dilute HCl. Introduce zinc sulphide fibers, warm and examine.* Evaporate to dryness, add NH_4OH. Examine the fibers again and introduce one or two new fibers.

In acid solution the fiber is:

Lemon yellow — As, Cd.
Reddish yellow — Sb, Bi.
Straw yellow — Sn.
Brownish yellow — Ag, Bi, Cu, Hg, Pb, Sb (*Co, Fe, Mn, Ni*).
Black — Ag, Bi, Cu, Hg, Pb.

In acid solution no color, but in alkaline solution the fiber may turn:

Brownish — Co, Fe, Mn, Ni. (These elements rarely give good reactions with the fibers.)

14. To a moderately concentrated drop containing a trace of HNO_3 add CsCl and KI (see page 353); crystalline precipitates are obtainable with Sn, Sb, Bi, Pb, Hg. Amorphous precipitates with Ag, Hg. Iodine often separates, especially in the presence of Cu.

15. In the above outline no satisfactory indication for the presence of the following have been obtained: Na, NH_4, Ni, Si, Bo, As. Hence apply suitable identity tests for these elements.

16. Remember that carbonates and hydroxides must be converted into chlorides or nitrates (or sulphates) before being tested for bases.

17. The material is insoluble in water and in acids: Crush to the finest possible powder in a tiny agate mortar. Fuse with Na_2CO_3, with K_2CO_3, or with $HKSO_4$, using the smallest possible amount of reagent. Test in the usual way for Si with NH_4F and NaCl and for the bases after treatment with acid and removal of the SiO_2.

In some cases silicates may be decomposed by heating in a tiny platinum cup with NH_4F and H_2SO_4.

THE COMMON ACIDS.

In the elementary course whose outline is covered by this textbook the identification of the acid radicals in *simple salts* or simple mixtures alone is undertaken. With materials of this nature the qualitative analysis is comparatively easy and no elaborate directions or schemes of procedure are necessary. Most of the tests for the acids have already been studied and it is merely necessary in most cases to reverse the test for the bases to enable us to properly identify the acids.

The behavior of the crystals, obtained in a test, toward polarized light will be found to be of great value in identifying the

salts present in a mixture. The student should have acquired therefore, early in the course, the habit of examining his preparations between crossed nicols. Proceeding in this manner in connection with the qualitative tests we can usually determine the true nature of the salts present.

In testing for the acids it is essential that the student shall always examine the preparations before they evaporate to dryness and that he shall carefully observe the various precautions which have been given in the discussion of the various tests for the bases.

When dealing with an unknown substance first spread out a little of the dry material upon a slide and examine it with a low power. If the material is not homogeneous, endeavor to pick out particles of its different components, using a platinum wire or glass rod. Then work upon each component separately.

Try the solubility in water, acids, etc.

Test the reaction toward litmus-silk (Method *VIII*, page 260) or other indicator.

If the material is crystallizable, make observations as to its probable crystal system. Test the crystals between crossed nicols.

Finally make rough estimations of the refractive indices by the immersion method or make melting-point determinations, or both, if possible.

For convenience in microchemically testing for the acids we may make use of the following slight modification of the Bunsen-Treadwell classification of the acids, based upon the behavior of their salts toward silver nitrate, and toward barium chloride, in neutral and in nitric acid solutions.

In case a free acid is to be dealt with it is best to add ammonium hydroxide in slight excess and drive off the excess, after neutralization, by evaporation to dryness. Then proceed as follows:

I. To a drop of the moderately concentrated aqueous solution of the unknown apply a drop of concentrated solution of silver nitrate by Method *I*, page 251.

A. *No precipitate is produced and no crystalline deposit is obtained* until the drop concentrates through spontaneous evaporation. See I. *A*, below.

B. *A colored precipitate is produced*. See I. *B*, below.

C. *A white or colorless precipitate is produced*. See page 371.

After a few seconds apply a small drop of nitric acid (1 : 3) to the zone of precipitate.

1. *The precipitate dissolves in whole or in part*. If only in part, decant the solution and apply a fresh drop of nitric acid to the residue, to ascertain if the unknown consists of a mixture of both soluble and insoluble silver salts.

2. *The precipitate is unaffected*.

II. To another drop of the dilute aqueous solution add a drop of barium chloride solution. See page 251.

A. *No precipitate results*. See page 372.

B. *An amorphous, granular or crystalline precipitate is produced*. See page 372.

1. *The precipitate is soluble in whole or in part in nitric acid*.

2. *The precipitate is insoluble in nitric acid*.

III. To a drop of the dilute aqueous solution of the unknown material add a drop of nitric acid. A granular or amorphous precipitate results. See page 373.

I. *A*. *No Precipitate with Silver Nitrate*.

Chlorate.
Fluoride; silicofluoride.[1]
Nitrate.
Perchlorate.[1]
Sulphate.[1]

I. *B*. *The Precipitate is Colored* (*by Reflected Light*).

Arsenate.	Red, brown or thick crystals black.
Arsenite.	Yellow.
Chromate, bichromate.	Red, brown or black.

[1] Crystals separate slowly from moderately concentrated solutions or even from dilute solutions on long standing.

Ferricyanide.	Yellowish-red, or brownish-red.
Iodide.	So faintly yellow as to appear white.
Iodate.	So faintly yellow as to appear white.
Manganate, permanganate.	Violet.
Nitrite.	Colorless unless in masses, then greenish.
Phosphate.	Yellow.
Sulphide.	Black or brown.

I. C. 1. *The White or Colorless Precipitate Dissolves.*

Salts.	Appearance of the precipitate before the nitric acid is applied.
Acetates.	Crystalline; prisms and plates.
Borates.	Granular.
Carbonates.	Amorphous or granular.
Cyanates.	Dense amorphous.
Iodates.	Granular or crystalline in tiny stars or fine needles. Difficultly soluble in HNO_3.
Nitrites.	Long slender needles.
Oxalates.	Granular or crystalline; short stout prisms, rhombs or hexagons.
Sulphates.	Prisms, rhombs and crystallites.
Sulphites.	Granular or crystalline; prisms.
Tartrates.	Amorphous becoming crystalline; crystallites and prisms.
Thiosulphates.	Dense amorphous, or granular, white changing to yellow, red-brown or dark brown due to formation of silver sulphide. When much sulphur separates the precipitate may appear to be insoluble in HNO_3.

I. C. 2. *The Colorless Silver Salt is Insoluble in Nitric Acid.*

Chloride.	Hypochlorite.
Bromide.	Ferrocyanide.[1]
Iodide.	Sulphocyanate.

[1] Turns yellowish red or brown when drop of nitric acid is applied.

II. *A. No Immediate Precipitate is Obtained with Barium Chloride.*

Acetate.	
Arsenate.[1]	Ferrocyanide.[1]
Borate.[1]	Iodide.
Bromide.	Nitrate.
Chlorate.	Nitrite.
Chloride.	Oxalate.[1]
Cyanide.	
Cyanate.	
Ferricyanide.	

II. *B.* 1. *Barium Chloride gives a Precipitate Soluble in Nitric Acid.*[2]

Salts.	Appearance of the precipitate before the nitric acid is applied.
Arsenites.	Amorphous.
Carbonates.	Amorphous or granular; becoming crystalline.
Chromates, bichromates.	Yellow granular, or crystalline, only slowly soluble in nitric acid.
Cyanates.	From concentrated solutions, in prisms.
Fluorides.	Granular.
Iodates.	Stars and dendrites. Only slowly soluble.
Phosphates.	Amorphous or granular.
Sulphites.	Granular or crystalline.
Tartrates.	Granular.

II. *B.* 2. *The Precipitate obtained with Barium Chloride is Insoluble in Nitric Acid.*

Silicofluoride.

Sulphate.

Chromate, bichromate and iodate precipitates are only slowly soluble in nitric acid.

[1] With concentrated solutions of these salts barium chloride will give a slowly formed crystal deposit.

[2] Concentrated nitric acid precipitates barium nitrate in large colorless, isometric crystals.

III. *Nitric Acid produces an Amorphous or Granular Precipitate.*

Molybdate.
Silicate.
Tungstate.
Titanate.
Zirconate.

Note. — It must be remembered that the addition of strong nitric acid will cause a *crystalline* precipitate in the case of many salts of low solubility.

A somewhat better scheme of separation of the acids has been proposed by C. G. Hinrichs[1] based upon the behavior of their salts toward acetic and sulphuric acids when heated.

Group I. — Salts which when heated with strong acetic acid are decomposed and certain components are volatilized.

Carbonate (CO_2).
Cyanide (HCN).
Hypochlorite (to Cl).
Hyposulphite (SO_2).
Nitrite (oxides of N).
Sulphide (H_2S).
Sulphite (SO_2).

Group II. — Salts which when heated with strong sulphuric acid are decomposed and certain components are volatilized.

Acetate ($HC_2H_3O_2$).
Borate ($B(OH)_3$).
Bromide (HBr).
Chlorate ($HClO_3$).
Chloride (HCl).
Cyanate (CO_2 and NH_3, latter forms $(NH_4)_2SO_4$).
Ferrocyanide (HCN).
Ferricyanide (HCN).
Iodide (HI).
Nitrate (HNO_3).

[1] Hinrichs, Microchemical Analysis, p. 116, St. Louis, 1904.

Group III. — Non-volatile with sulphuric acid.

Arsenate.
Arsenite.
Chromate, bichromate.
Manganate.
Permanganate.
Phosphate.
Sulphate.

The separation by the above method may be carried out as described under Distillation, page 245.

ACETATES.

a. With Silver Nitrate in concentrated, approximately neutral solution, pearly scale-like crystals of silver acetate are obtained. Later these develop into long thin prisms with more or less irregular sides and ends. Those in which six edges are developed give terminal angles a trifle over 90 degrees, and extinction almost parallel with their length (extinction angle 8 degrees). To confirm the test distil a portion acidified with phosphoric acid. In the absence of phosphoric acid, sulphuric acid may be employed.

b. With Mercurous Nitrate added to concentrated solutions. Colorless plates and prisms; the thin six-sided prisms have their terminal angles equal to 100 degrees and exhibit parallel extinction.

c. With Sodium Chloride and Uranyl Nitrate in approximately neutral solutions. Sodium uranyl acetate is obtained. See Sodium, Method *A*, page 274. Add the uranyl nitrate to the drop of unknown, and draw this solution across the dry film of sodium chloride.

ARSENATES.

a. With Silver Nitrate. See Silver, page 337; Arsenic, page 351.

b. With Zinc Acetate and Ammonium Chloride in Ammoniacal Solution. See Magnesium, page 306.

ARSENITES.

a. With Silver Nitrate. See Arsenic, page 351.

BORATES.

a. With Ammonium Fluoride in Dilute Hydrochloric Acid Solution. Add to the drop on a celluloid slip NaCl, or $BaCl_2$, then the reagent, then a trace of HCl. See Sodium, page 279.

Precautions. — Silicon, titanium and zirconium must be absent. The test drop must be moderately concentrated.

b. Test with a Turmeric Linen Fiber. See page 261.

BROMIDES.

a. Staining Starch Yellow.

To a drop of the solution to be tested add a trace of dilute sulphuric acid, warm gently. Cool. Add a very little potato starch, just enough to give a few granules in the center of the drop. Introduce at the center of the drop a small crystal of ammonium persulphate. Bromine is set free and colors the starch granules yellow. If iodides are present the starch will be colored blue or violet.

Too long and too high heating will result in the loss of hydrobromic acid.

The preparation must be cool when the starch is added, otherwise the granules will be destroyed.

The preparation must be examined at once, otherwise the yellow color will have disappeared.

b. Silver bromide (and silver chloride) is soluble in ammonium hydroxide; silver iodide is not.

CARBONATES.

a. Characterized by Effervescence with hydrochloric or sulphuric acid. Gas bubbles visible in gelatin. See page 263. Cyanates give a similar reaction, carbon dioxide being formed by the reaction between cyanate and acid.

b. In Solutions of Carbonates, Lead Acetate produces characteristic crystals of lead carbonate.

c. To test the character of the gas given off, place in the distilling apparatus, Fig. 130, page 245, exposing a drop of lead acetate to the vapors.

CHLORIDES.

a. With Silver Nitrate. See Silver, page 331.

b. With Lead Nitrate. See Lead, page 325.

CHLORATES.

a. Test the material with Rubidium Chloride and a little Potassium Permanganate to be sure perchlorates are absent (see Experiment *a*, Method *IX*, page 262). *Then Convert into Perchlorates as follows:*

Dissolve a little of the material in a drop of water at the corner of an object slide, evaporate to dryness. Add a drop of sulphuric acid, evaporate to dryness and heat until white fumes escape. Add a second drop of acid and heat until the excess of sulphuric acid has been driven off. Cool. Add a tiny drop of potassium permanganate (just sufficient to color the drop) and a crystal of rubidium chloride. Allow to stand for a short time and examine. Characteristic crystals of rubidium perchlorate will separate, colored pink or violet through adsorption of the permanganate.

The chlorate is only partially converted into the perchlorate, hence this test is not always successful, and is of little value in complex mixtures.

CHROMATES; BICHROMATES.

a. Test with Silver Nitrate in nitric acid solution. See Silver, page 334; Chromium, page 357.

b. Test with Strontium Acetate. See page 301.

c. Bichromates give no separation of crystals *with Manganous Sulphate; Chromates do.* See Manganese, page 360.

CYANIDES.

a. Place the material in the glass crucible of apparatus, Fig. 130, page 245; moisten with dilute sulphuric acid, cover with a slide bearing a drop of silver nitrate. If no tiny prismatic crystals are obtained and no clouding of the silver nitrate, cyanides are absent. If a clouding of the drop results, make a fresh test, this time substituting for the sulphuric acid, a saturated

solution of primary sodium carbonate; hydrocyanic acid will be set free and will give a characteristic silver cyanide.

b. Set free the vapors of the acid and expose to them a drop of sodium picrate. A blood red solution results.

CYANATES.

a. To a drop of concentrated solution add at the center, a tiny crystal of cobalt acetate. The crystal will be immediately surrounded by a deep blue colored zone and a blue amorphous precipitate. The blue zone increases in diameter and eventually may reach the circumference of the drop. Upon evaporation deep blue tetragonal dendrites, and tabular and prismatic crystals of a compound corresponding to the formula $K_2Co(CNO)_4$ will appear. Note that to obtain this compound the cyanate must be in excess. With sulphocyanates tested thus a deep blue liquid is obtained on evaporation, but the blue dendrites which may separate have a different habit.

Cyanides yield no blue, but a brown color instead. Even a small amount of cyanide will prevent the blue zone, but the crystal will be blue surrounded by a yellow or brown zone.

b. Treat a drop with dilute sulphuric acid in the distilling apparatus, Fig. 130, page 245. Evaporate very gently almost to dryness; add a few fibers of freshly ignited asbestos and proceed to test for ammonia. See Ammonium, Method *A*, page 286. With sulphuric acid cyanates yield carbon dioxide and ammonium sulphate.

Precaution. — Always make a blank test upon the reagents to be sure of their freedom from ammonium salts.

FERRICYANIDES.

a. *Give off Vapors* when heated with sulphuric acid which produce silver cyanide. See Cyanides, *a*, page 377.

b. To the test drop add sodium acetate, then *apply a solution of Benzidine Hydrochloride*[1] by Method *I*, page 251. Light blue prisms and stars will soon appear.

Ferrocyanides do not give this reaction.

c. *Give no color with dilute solutions of pure Ferric Salts.*

[1] Behrens, Z. anal. Chem., 43, 432.

FERROCYANIDES.

a. Give a Blue Precipitate with Salts of Iron and a brown one with salts of copper in acetic acid solution.

b. With Quinoline Hydrochloride yield upon warming cubical crystals.

IODIDES.

a. To a drop of solution add dilute sulphuric acid, a little potato starch and a tiny fragment of ammonium persulphate. The starch is turned blue or violet in the cold. See Bromides, page 375.

b. The silver nitrate precipitate is insoluble in ammonium hydroxide; distinction from chloride and bromide.

c. Yield characteristic hexagonal plates with lead nitrate. See Lead, page 323.

IODATES.

a. Dissolve in water, add a very tiny drop of dilute sulphuric acid, a little potato starch and finally a crystal fragment of morphine sulphate. Iodine is set free and the starch granules turn blue or violet.

Iodides do not give this reaction; nor will iodates give reaction *a* under iodides.

NITRATES.

a. With Nitron Sulphate in Acetic Acid Solution. Apply the reagent by Method *I*, page 251.

There is immediately formed a heavy precipitate, consisting of masses of exceedingly minute needles. In a few seconds sheaves of acicular prisms appear and later there are formed long thin prisms with square ends, giving polarization colors and parallel extinction. Nitron nitrate has a very low solubility even in warm water, hence the reaction is a delicate one. The sheaves of white crystals, appearing brownish by reflected light, are characteristic.

In dilute solutions none of the salts of the common acids inter-

fere save iodides and bichromates. With these salts there may be obtained crystals which closely resemble the nitrate but these crystals disappear upon even gentle warming; nitron nitrate will not.

From concentrated solutions there may be obtained under favorable conditions, precipitates with chlorates, perchlorates, phosphates, chromates, bichromates, iodides, ferro- and ferricyanides, oxalates and tartrates, but in no case in dilute solutions with gentle warming should there be any difficulty in differentiating between such precipitates and the crystals obtained with nitrates.

NITRITES.

a. With Silver Nitrate there is obtained a felted mass of fine needles with long acicular prisms at the outer edge of the mass, changing into short stout prisms with imperfectly developed ends. These crystals are colorless under the microscope and do not show their greenish tint until viewed in masses by reflected light.

b. With Potassium Iodide and Starch. Add to the drop to be tested a crystal of potassium iodide, then a little potato starch and finally a trace of dilute sulphuric acid. The hydroiodic acid set free by the acid is oxidized by the nitrous acid; iodine is liberated and stains the starch blue or violet or black.

Always test the potassium iodide, with starch and dilute sulphuric acid, to ascertain its purity and to be certain that no appreciable blueing of the starch takes place with the reagents alone.

Only traces of iodine are liberated from iodide when treated with a crystal of morphine sulphate as described under iodates, page 378.

OXALATES.

a. With Strontium Acetate. See Calcium, page 291; Strontium, page 295.

b. With Silver Nitrate or Lead Nitrate. See Calcium, page 291.

PHOSPHATES.

a. To the drop to be tested, add a drop of Nitric Acid. Then apply a drop of Ammonium Molybdate by Method *I*, page 251. Warm gently. Phosphates yield a yellow precipitate appearing amorphous under the microscope unless a magnification of over 200 is employed. A similar reaction will be obtained if silico-molybdates or arseno-molybdates are formed.

This reaction is of value if arsenic and soluble silicates are absent and as indicating whether much or little phosphate is present. If a heavy precipitate is obtained, apply test *b*.

b. To the Ammoniacal Solution add Ammonium Chloride and Magnesium Acetate, proceeding as described under Magnesium, page 305. Arsenates must be absent.

Note. — Phosphates frequently interfere with the detection of certain bases and must be removed before reliable reactions can be obtained; their removal may be accomplished by means of tin in acid solution. Acidify with nitric acid, add a few tiny bits of pure tin-foil and as soon as the reaction has ceased, heat to boiling. Cool and extract the material with dilute nitric acid.

SILICATES.

a. Treat the material upon a celluloid object slide with ammonium fluoride, sodium chloride and sulphuric acid. Sodium silicofluoride is formed. See Sodium, page 278. Boron, zirconium and titanium must be absent.

SULPHATES.

a. To the drop add a trace of Nitric Acid, then a drop of Calcium Acetate by Method *I*, page 251. Characteristic needles or prisms of calcium sulphate result. See Calcium, page 288.

b. To the drop add a trace of Potassium Chromate, a trace of Nitric Acid and a drop of Silver Nitrate. Characteristic crystals of silver sulphate will be obtained, stained yellow through solid solution of the silver chromate. See Silver, page 335.

SULPHITES, THIOSULPHATES.

a. To a drop of a solution of potassium iodate add a little potato starch and a small drop of dilute sulphuric acid. Examine to see that no iodine has been set free. Add a fragment of the unknown. The starch is colored blue.

b. To a moderately concentrated drop of copper sulphate apply a drop of a solution of the unknown by Method *III A*, page 254. Warm gently — sulphites, if pure and undecomposed, yield at the most only a faint cloudiness — thiosulphates give a brown precipitate of copper sulphide and around the circumference of the drop lemon-yellow crystals of copper thiosulphate.

SULPHIDES.

a. The Silver Nitrate Precipitate was Black.

b. Place a drop of solution or fragment of solid in the distilling apparatus, cover with a slide holding a tiny drop of silver nitrate and one of lead acetate side by side. Raise the cover and carefully run in a drop or two of dilute hydrochloric acid. Cover quickly and allow to stand. Both drops turn black.

c. Proceed exactly as in *b* but invert over the crucible a slide carrying a drop of sodium nitroprusside. A beautiful purple color results. The reagent drop must be alkaline with sodium or ammonium hydroxide.

SULPHOCYANATES.

a. Give a Blood-red Color with dilute Ferric Chloride.

b. Add Mercuric Chloride and Zinc Sulphate. There will be obtained the double sulphocyanate of mercury and zinc. See Zinc, page 308; Copper, page 340. Add a trace of copper and increase the delicacy of the reaction.

TARTRATES.

Note. — Before testing for tartrates always neutralize any free mineral acid present.

a. By means of Calcium Acetate.

The solution may be neutral or acidified with acetic acid.

Large, colorless, well-formed, highly refractive crystals are obtained.

The solution to be tested must be concentrated, otherwise the calcium tartrate will not separate save on long standing. Exposure to alcohol vapors (Method *VI*, page 257) will hasten the formation of a crystal deposit.

Magnesium salts greatly retard the separation of crystals of calcium tartrate.

b. With Potassium Salts, tartrates yield characteristic colorless, highly refractive, orthorhombic, short, stout prisms of the primary salt $KHC_4H_4O_6$.

c. With Silver Nitrate.

A granular precipitate only is obtained unless in very dilute solution, then there will be obtained tiny squares and rectangles and short, stout prisms giving a six-sided outline.

Most other acids interfere with the detection of tartrates by means of the silver salt.

CHAPTER XV.

PREPARING OPAQUE OBJECTS FOR THE MICROSCOPIC STUDY OF INTERNAL STRUCTURE.

In order that alloys and many other similarly constituted materials may be properly studied and their internal structures ascertained it is usually essential that large or small pieces be ground down to a plane surface which may be so placed under the microscope as to lie at right angles to the optic axis of the instrument. It is further necessary that this plane surface shall be so smooth as to show no striations due to grinding, otherwise these parallel or irregular streaks will confuse the observer. Removal of the streaks is accomplished by polishing or, in other words, grinding with an abrasive so fine that the scratches made are so close together and so shallow that they will not be resolved by the objectives used in the microscopic examination. If these polished specimens are subjected to the action of various solvents, it will be found that in non-homogeneous materials, certain components are easily dissolved and certain others are resistant. The specimen thus treated, is said to have been *etched*, and when the etched surface is examined a more or less marked crystalline structure is visible. Through the judicious selection of the proper etching liquids we are able to bring into view different components or phases and thus trace the changes in structure through changes in percentage composition, or through changes in the temperatures to which the specimens have been submitted.

Or instead of submitting the polished surface to the action of a corrosive liquid, we can rub it upon a thick, soft cloth charged with a fine abrasive powder. The softer components will thus be more rapidly worn away than the harder; again we obtain evidence of a more or less marked crystalline structure. The specimen is no longer spoken of as having been etched, but

is said to have been *polished in relief*. Since in almost all the materials commonly studied we deal with components differing in hardness, it is exceedingly difficult to obtain polished specimens which do not exhibit some relief polishing. Practice and a light touch are the only effective preventives.

The wearing or cutting off of irregularities so as to obtain a flat surface is termed roughing. Roughing is most easily accomplished by holding the specimens against rapidly revolving abrasive wheels.

The most useful American abrasive wheels are emery, corundum, alundum, crystalon and carborundum. Emery and corundum are natural products, while alundum, crystalon and carborundum are products of the electric furnace; the first three mentioned consist of crystallized alumina, the last two consist of crystalline carbide of silicon. Of these, emery cuts or wears away specimens the least rapidly, crystalon and carborundum the most rapidly.

All three steps, grinding, polishing and etching, require patience, practice and a certain inherent technical skill. Practice, and practice alone, will enable the student to properly prepare specimens. The selection of the proper sequence of abrasives, the right pressure of the specimen against the grinding material, the rate of speed or motion in grinding and polishing all enter into the preparation of the specimen. No specific directions can, therefore, be given, but merely a general outline of the steps to be taken and the special precautions to be observed. So, too, in the etching much depends upon the individual. The proper concentration of reagent (which differs for different alloys of the same type), the way in which the specimen is immersed or submitted to the action of the reagent, the time of exposure, temperature of the room and reagent, thoroughness of removal of the etching liquid by washing, etc., each enters largely into the preparation of really satisfactory specimens and all contribute to the elucidation of the problem or to the confusion of the investigator.

Grinding wheels are made from powdered abrasive mixed with a suitable binder, pressed into moulds and fired in an oven.

The character of the binder and the degree of incipient fusion characterizes a wheel as hard or soft. The degree of hardness or softness is technically spoken of as the *grade* or *hardness* of the wheel. American manufacturers usually indicate the grades of their wheels by letters of the alphabet, but the scale of hardness as indicated by the letters is by no means uniform with different manufacturers. Consequently, a letter indicating a grade cannot be interpreted without reference to the scale of hardness of the particular firm from whom the wheel was obtained. For example, we find that a wheel marked *U* may be "hard" as supplied by one firm, but if we purchase a *U* grade from another firm we will obtain a "very soft" wheel. In selecting wheels for grinding specimens, it is safe to be guided by the general rule that a soft wheel will cut more rapidly and deeper than a hard one, will clear itself more readily, but is more easily worn away, and therefore more liable to be spoiled. The soft wheels as a rule must be run at higher speeds. Hard wheels on the other hand tend to glaze over, cause more heating of the specimen and often yield aggravated cases of surface films or surface flow of soft components, but they cut slower, hence do not so deeply score or furrow the specimen through injudicious pressure and may be employed to better advantage when only low speeds are available.

Besides the grade or hardness of grinding wheels as influencing their suitability for certain work, the diameter and the uniformity of the individual particles employed in building up a wheel must be taken into account. The size of the component particles is called the *grain* or *grit*. Grain is obtained in manufacturing by screening the abrasive powder. The number of linear meshes to the inch through which the powder will pass is the grain number of the wheel. For example, in a wheel marked 50, the component particles will pass through a sieve having fifty meshes to the inch.

The grain numbers employed by different manufacturers are not comparable because the size of wire employed in the sieves used for the grading is not always the same. Since it is the number of linear meshes to the inch and not the diameter of

the opening that is recorded, the size of the wire greatly influences the screened product.

Although for industrial purposes abrasive wheels may be said to conform closely to the grade and grain indicated by the manufacturer, it will be found that in preparing specimens for microscopic study, wheels are not easily duplicated and if we purchase a wheel to replace one accidentally ruined we are apt to find that it will not do just the work of the one lost.

Wheels of softer grade and coarser grain (at high speeds) can be used for roughing chilled iron and steels, — hard and of high tensile strength, — than for material like brass — soft and of low tensile strength.

No single type of wheel as to grade and grain will answer for all purposes. A laboratory in which a great variety of work is to be done will therefore require a series of wheels.

Table VI.

CHARACTER OF ABRASIVE WHEEL REQUIRED.

	Grain or grit.	Grade or Hardness.
Alloy, aluminum type	20 to 36	Hard
Alloy, brass type	20 to 46	Hard
Alloy, bronze type	20 to 36	Hard
Alloy, nickel type	20 to 36	Medium-hard
Iron, cast	30 to 54	Medium-hard
Iron, chilled	20 to 46	Medium-hard
Steel, soft	30 to 54	Medium
Steel, hard	60 to 100+	Medium to medium-hard
Soft porous material	14 to 20	Hard
Soft friable material	46 to 80	Medium
Moderately hard compact material	30 to 54	Medium
Very hard brittle material	100 to 180	Hard

A fairly satisfactory system of study with reference to the selection of wheels for different materials and the proper speeds for grinding consists in examining with the microscope the roughed surface of the specimen as ground under different conditions and also the dust or particles falling from the wheel. These particles consist of material torn off the specimen and particles of abrasive and binder. The character of the dust and the furrows upon the specimen will, with a little experience,

indicate at once, to the worker, whether he is employing the proper grade, grain and speed. It is strongly urged upon the beginner to carry out experiments in this manner and spend considerable time, if possible, in ascertaining just what different wheels will do under like speeds.

Table VI may serve as a rough guide to the selection of the wheel which will prove satisfactory with the materials indicated.

If the grinding room equipment is limited to two or three wheels it is evident that the widest range of applicability will be found in the following selection: 30 hard, 40 medium-hard, and 60 or 80 medium, providing a sufficiently high speed is available.

The operating speed of a grinding wheel is usually expressed as "surface velocity" in feet per minute in order that wheels of different diameters may properly be compared.

Surface velocity = Diameter wheel in feet $\times$ 3.1416 $\times$ R.P.M. of arbor.

Most small wheels used for grinding are designed to run with a surface velocity of from 2000 to 4000 feet per minute. This requires that the grinding head shall rotate at the rate of approximately 1800 to 3000 revolutions per minute for a five or six inch wheel, if the data given in Table VI are followed. For slower speeds it will be necessary to select finer grains and harder grades. In order to permit some latitude in the selection, it is best to have the grinding head and driving motor provided with cone pulleys or, better yet, to employ a shunt-wound electric motor and rheostat and thus obtain a variation in speeds.

One of the greatest troubles we encounter when dealing with abrasive wheels or papers or powders is the non-uniformity of grain size. A few large grains present, often a single one in a small area of the grinding surface, will so deeply scratch the specimen as to render its proper preparation almost impossible. If a wheel is found upon trial to have any such projecting particle the wheel should be abandoned at once, and never be employed save for the crudest sort of grinding. It is this difficulty which leads many workers to discard abrasive wheels for all save the roughest dressing of a specimen and use only laps fed with very carefully ground, sifted and floated abrasive powders.

Laps may be either horizontally or vertically driven. The beginner will find that satisfactory surfaces are obtained easier upon the horizontal lap but it is open to the objection that it does not readily clear itself and any dust or dirt falling upon it or any large particle of abrasive will be apt to deeply groove the specimen. The vertical lap on the other hand is difficult to keep charged with pasty abrasive or thin suspensions of abrasive and polishing powders.

In the case of soft alloys, facing to a smooth surface is most easily accomplished by means of files, rough dressing with a 10 or 12-inch bastard cut file and passing to an 8 or 10-inch single cut. With moderately soft materials such as brass, laying a single cut mill file flat upon the work bench and pushing the specimen down the file against the cutting edges will be found to yield good smooth surfaces with less practice and skill than by holding the specimen in a vise and pushing the file. The specimen should be pushed lengthwise of the file with gentle pressure until it reaches the tang end, then lifted off; the file turned edgewise and struck a sharp blow upon the bench to remove filings, again laid flat and the specimen again laid upon the file and gently pushed toward the tang end, and the process repeated until a small plane surface is obtained. Specimens should never be rubbed back and forth upon an abrasive surface, for it is then almost impossible to keep the striations parallel, a matter of not a little importance.

In order to facilitate smoothing and polishing, the edges of a specimen should always be slightly beveled or rounded during the roughing. Unless this precaution is taken the beginner will find it difficult to avoid cutting, tearing or destroying the fabric carrying the polishing powder.

After surfacing with wheel or file the specimens are smoothed upon laps fed with very fine abrasive powder or upon laps or blocks upon which abrasive paper has been smoothly glued. Whenever such papers are employed it is best to go over their surfaces with a low-power magnifier and reject any sheets which show isolated large particles of the abrasive covering. Of the fine-grained abrasive papers tried by the author, the French

"*Hubert*" [1] papers are the best and most uniform of grain. The most useful are numbers oooo, ooo, oo, o and 1, the last named being the coarsest.

General Methods for Preparing Hard Specimens.—Grind to a *plane* surface upon the proper wheel, using a high speed and holding the specimen so that it just barely touches the rotating surface. If pressed too hard against the wheel there will be deep scoring and too much heating. Observe great care to prevent the specimen from turning in the fingers. A properly rough-ground specimen should show *all the striations parallel* and of approximately the *same* depth. Next bevel or round the edges of the specimen around the ground surface, then apply the specimen to a finer-grained wheel or to a lap fed with finer-grained powder, grinding so that the striations are *at right angles to the first.* Continue grinding until when examined with a low magnification no vestiges of the first striations remain. If now the striations are very shallow, polishing may be begun; if not shallow, grind with a third finer abrasive; again grinding at right angles to the direction last taken and continuing until all trace of the preceding grinding has disappeared. Polishing is carried out in like manner, using finer and finer powders moistened to a pasty consistency with water or oil or other suitable vehicle. When oil, vaseline or a similar vehicle has been employed in the grinding, especially when dealing with materials which have a tendency to adsorb the grease, as for example certain rocks, earthenwares, terra-cottas, porcelains, cements and concretes, etc., it will be found that polishing proceeds with far greater speeds and with much better surfaces when the polishing powders are suspended in a solvent for greases and oils, than when water is employed. The best of these are alcohols, ethers and light petroleum products or mixtures of them.

With each change in fineness, polish at right angles to the former motion. Complete the polishing with the finest washed and floated rouge or floated alumina kept well moistened upon soft and very close-textured broadcloth stretched upon a wooden

[1] These imported papers can be obtained from Montgomery and Co., 105 Fulton Street, New York City.

lap. A beautiful mirror surface should have been obtained with no signs of striations when examined with a microscope of the same power as will be employed after etching. Wash the specimen carefully, and dry by gently pressing with lens paper. *Never rub* when drying and always avoid touching the polished surface with the unprotected fingers.

If oil has been used as the vehicle, wash first with gasoline or benzene, and follow with alcohol and ether.

General Methods for Preparing Soft Specimens. — The beginner should never attempt to grind and polish soft specimens upon a rotating wheel or lap. Even the roughing is best done with a file or by rubbing upon abrasive paper or cloth glued upon blocks of wood. Great care must be observed in rubbing the specimen so that it shall never turn. The lines of abrasion must be kept parallel. Every few minutes the block should be turned on edge and struck upon the bench with a sharp blow in order to clear it from loose particles and dust; if this is not done deep scoring of the surface is sure to follow. When passing from one abrasive to a finer one, turn the specimen to a position at right angles to the other and rub very gently until every trace of the former scratches has disappeared. The polishing is carried out in the same manner upon close-textured soft cloth stretched upon blocks and covered with a thin paste of rouge or alumina, ending up with the finest possible floated rouge. It will be found convenient to pass from a grain of 220 to F, to FF, to FFF, then to ordinary rouge or "rotten stone" and finally end up with the finest particles obtained by washing and decanting the finest commercial rouge. Wash and dry the specimen with lens paper. But even lens paper will scratch the surface of soft alloys or other soft material.

When dealing with very soft materials, after washing with water, shake off the last drops and pour absolute alcohol over the polished surface, shake, repeat the operation and then remove the last traces of alcohol with a few drops of ether.

Grinding Hard Friable Material like Glass or Porcelain. — Employ lap heads of block tin fed with emery powder and water or turpentine. Emery does not cut as fast as carborundum,

crystalon or similar abrasives, but also does not so deeply score the specimen and therefore the time lost in grinding is usually gained in polishing.

For grinding, the lap head should rotate quite slowly, one or two hundred revolutions per minute being the maximum for ordinary work. In polishing a somewhat higher speed may be employed with advantage. Polish with fine rouge and complete the finish with "putty powder."

Etching. – This step has for its object the development of the crystalline structure of the specimen. It is based upon the principle of submitting the polished specimen to the action of a corrosive liquid of such a nature as to dissolve some components more rapidly than others.

The surface to be treated being a mirror surface, free from all striations, it follows that the slightest attack by an etching liquid will be easily seen by means of the microscope.

Suppose, for example, we have an alloy consisting of a single crystalline phase and an eutectic. Two systems of attack would reveal the nature of its structure; a reagent could be employed which would dissolve the eutectic leaving the crystalline phase unattacked, or another reagent could be selected which would *first dissolve the crystals leaving the eutectic.* Whenever it is possible, specimens should be etched by both systems, for then the probability of misinterpretation of appearances is much reduced. The development of the structure of a specimen so as to render its microscopic study successful requires considerable practice.

Small specimens are grasped in rubber-tipped or cloth-covered (binding tape) forceps and dipped, polished surface down, or polished surface sidewise, into the etching liquid; immediately removed, washed in running water, dried with lens paper and examined. If the structure has not been sufficiently developed, it is again dipped and again washed and examined. This process is repeated until the etching is sufficiently deep to make the crystal phase or phases interpretable. Too long immersion leads to uneven etching, to crystal sections with badly eroded edges and often to serious pitting. With many of our etching

liquids gases are formed; the tiny gas bubbles clinging to the surface, if not at once dislodged, prevent a uniform attack and a specimen is obtained of no value for study. The only course left open is to regrind and polish anew.

In cases where much gas is evolved better specimens may often be obtained by dipping a small wad of absorbent cotton into the etching liquid and *gently* brushing the wet cotton upon the surface, washing in running water from time to time. In other cases stretching a piece of soft clean chamois leather upon a board, moistening with the reagent and rubbing the specimens *lightly* upon this surface will give good results.

With most alloys there is obtained upon the completion of the polishing a thin film of the softer components more or less completely covering the surface, due to surface flow during the mechanical treatment. Not infrequently this surface film is of such a character that after etching the appearance of the etched surface is such as to entirely mislead the investigator. With some alloys dipping for a few seconds in exceedingly dilute acid (sulphuric is best) will remove the film, yet not appreciably etch the preparation. This often essential step requires considerable practice in order to duly appraise the time of exposure to the acid to just dissolve the surface film and yet not attack the polished surface.

The following are a few of the most generally useful of etching reagents. For the development of certain specific structures the student must consult the literature dealing with these problems.

Ammonium Hydroxide + Hydrogen Peroxide.[1] — Immerse the alloy in ammonium hydroxide diluted to such a strength (1 : 4) that the alloy is not rapidly etched. Add hydrogen peroxide from a pipette dropwise. This method gives better results than mixing the reagents before the specimen is immersed. Great care must be observed to avoid too rapid an attack and too deep etching. Excellent for alloys high in copper.

Ferric Chloride. — Prepare a hot, almost saturated solution of ferric chloride; filter, and add an equal volume of concentrated

[1] Ramsay, Chem. N., **87** (1903), 291.

hydrochloric acid. For use, dilute one part of this stock solution with twenty parts of distilled water. If upon trial the etching is too energetic, dilute still more; if not energetic enough, add more stock solution.

Useful in studying bronzes of high tin content and copper alloys in general.

Ferric Chloride + Alcohol. — Robin[1] prepares this reagent as follows:

	Per cent.
Ferric chloride	5
Water	5
Hydrochloric acid	30
Iso-amyl alcohol	30
Ethyl alcohol	30

The etching is rapid and needs careful attention to prevent over treatment, one to three minutes being the average exposure required.

Valuable in studying aluminum bronzes and brasses.

Hydrochloric Acid + Absolute Alcohol. — To 100 cubic centimeters of absolute alcohol add 1 cubic centimeter of concentrated hydrochloric acid. This is the general etching reagent of Martens and Heyn for all iron-carbon alloys. Applicable to all specimens but must be used with care. With extra hard steels and certain alloy steels this reagent does not work well. In these cases Martens suggests the nitric-alcohol reagent. Neither reagent is permanent, but must be freshly prepared for use.

Hydrochloric + Nitric Acid. — Mix three parts of dilute hydrochloric acid with one part of dilute nitric acid, add 2 or 3 drops of platinum chloride per 100 cubic centimeters of mixture. A valuable etching liquid for copper-nickel alloys.

Nitric Acid + Absolute Alcohol. — To 100 cubic centimeters of absolute alcohol add 4 cubic centimeters of concentrated nitric acid. Prepare just before using. Useful in the case of very hard steels and with certain alloy steels. Especially valuable in developing Troostite.

Picric Acid + Alcohol. — Employ a 5 per cent solution of picric acid in absolute alcohol.

[1] Traité de Métallographie.

Useful for all iron-carbon alloys, especially those high in carbon. Pure iron (ferrite) is not appreciably attacked save after long exposure.

With low carbon steels a higher concentration than 5 per cent is advisable.

This reagent not only etches but stains the specimen. Often a surface film, especially with high phosphorus irons and steels, is formed of such a character as to mask the structure. Gentle rubbing with a finger tip in washing will usually clear away the obliterating film.

Silver Nitrate. — Dissolve 5 grams in 100 cubic centimeters of water. After washing, rub the surface *very lightly* with a finger tip to remove the surface film formed. Long etching must be carefully avoided.

Useful with antimony, bismuth, tin and lead alloys, especially babbitts.

Sodium Hydroxide. — One of the best etching reagents for aluminum-zinc alloys. Start with a very dilute solution and increase the concentration until the proper strength is obtained which yields the best results with the particular alloy being studied.

Sodium Picrate. — Prepare a 20 per cent solution of sodium hydroxide, dissolve in it 10 per cent of sodium picrate. The reagent is poured over the polished steel specimen in a small casserole and heated to boiling for about ten minutes. This method was proposed by Le Chatelier and is one of the most valuable for differentiating between cementite and ferrite.

Sulphurous Acid.[1] — Valuable in the study of steels. Cementite is not attacked by a solution of 1 part in 25 parts of water. Serves to develop Martensite, Austenite and Troostite, but the appearances obtained are different for these components from those obtained with other reagents.

[1] Zeit. anorg. Chem., **68** (1910), 63.

APPENDIX.

Table VII.

MELTING POINTS OF COMPOUNDS USEFUL FOR APPROXIMATE MELTING-POINT DETERMINATIONS WITH THE MICROSCOPE.

Melting point.[1] °C.	Compound.
20	Acetophenon
21	Anethol
26	Diphenylmethane
30	Orthocresol
35	Phenol (in tube m. p. 40°)
42	Salol, Menthol
45	Metanitrophenol
48	Benzophenone
50	Thymol; Alphanaphthylamine
52	Dichlorbenzene
54	Diphenylamine
57	Chloral hydrate
62	Trichlorbenzene
63	Trichlor acetic acid
66	Sodium alum
67	*Coumarin; Hypnal*
68	Azobenzene
70	Diphenyl
71	Orthonitraniline
74	Hedonal
76	Trional
80	Vanillin
82	Acetamide
86	Saligenin
89	Paradibrombenzene
90	Metadinitrobenzene
92	Salipyrin; Triphenylmethane; Potassium alum
94	Alphanaphthol; Ammonium alum
95	Tribromphenol
98	Cocaine
100	Exalgin
104	Pyrocatechin
105	Brucine (hydrated)
107	Pyramidon
108	Hyoscyamine
110	Metanitraniline
112	Betanaphthylamine; Antipyrin; Paranitrophenol; Atropine
113	Acetanilide
115	Iodoform
116	Resorcin
118	Conhydrine
119	Tribromaniline
120	Colchicine (Merck)
122	Betanaphthol; Picric acid
125	*Dionin; Sulphonal*
126	Amidoazobenzene
128	Piperine
132	Urea; Hydrastine
135	Tartaric acid; Phenacetin
140	Paraphenylenediamine; Ammonium sulphate
145	Cholesterin
147	Ammonium sulphocyanate; Paranitraniline; Paraphenylenediamine hydrochloride
152	Ammonium nitrate
153	Alphadinitronaphthalene
155	Codeine (Merck)
156	Salicylic Acid
160	Esculin; Arabinose
165	Mannit
168	Quinine
169	Hydroquinon
170	Santonin
171	Heroin
173	Paradichlorbenzene
176	Narcotine
178	Brucine (anhydrous); Chrysarobin
180	Atropine sulphate
182	Succinic acid
184	Cinchonamine
187	Hippuric acid
188	Dulcit
189	Nitron
190	Aniline hydrochloride
191	Veronal
192	Picrotoxin (Merck); Physostigmine (Merck)
193	Thebaine
198	Ecgonine; Silver nitrate (200–209)
200	Salicin; Phloroglucin; Morphine; Saccharin
204	Phenylglucosazone
205	Quinine sulphate
208	Anthracene (208–213)
210	Coniine hydrochloride
217	Phenylhydrazine
221	Dibromanthracene
225	Inosite
230	Heroin hydrochloride
232	Metallic tin
234	Quercit
238	Carbazol
240	Dimethylglyoxime
250	Phenolphthalein
265	Strychnine
267	Metallic bismuth
270	Sodium nitrite
280	Alizarin
300	Mercuric chloride
310	Sodium nitrate
320	Metallic cadmium; Sodium bichromate
340	Potassium nitrate
370	Potassium chlorate
400	Silver bromide
407	*Thallous chloride*
420	Metallic zinc
510	*Lead chloride*
560	Potassium iodate
590	Barium nitrate
610	Potassium perchlorate
625	Potassium iodide; Metallic lead
630	Metallic antimony
640	Rubidium bromide
645	Strontium nitrate
650	Silver sulphate
660	Metallic aluminum
710	Rubidium chloride
715	Potassium bromide
770	Potassium chloride
850	Strontium chloride
960	Metallic silver
975	Potassium chromate
1000	Cadmium sulphate
1070	Potassium sulphate

[1] Figures given in this column allow a variation of ± 2 or 3 degrees in many instances.

THE PERIODIC CLASSIFICATION OF THE ELEMENTS.

International Atomic Weights, 1914.

Series	Zero group.	Group I.	Group II.	Group III.	Group IV.	Group V.	Group VI.	Group VII.	Group VIII.		
		R_2O	R_2O_2	R_2O_3	R_2O_4 RH_4	R_2O_5 RH_3	R_2O_6 RH_2	R_2O_7 RH	R_2O_8		
1		Hydrogen H=1.008									
2	Helium He=3.99	Lithium Li=6.94	Glucinum Gl=9.1	Boron B=11.0	Carbon C=12.0	Nitrogen N=14.01	Oxygen O=16.00	Fluorine F=19.0			
3	Neon Ne=20.2	Sodium Na=23	Magnesium Mg=24.32	Aluminum Al=27.1	Silicon Si=28.3	Phosphorus P=31.04	Sulphur S=32.07	Chlorine Cl=35.46			
4	Argon Ar=39.88	Potassium K=39.10	Calcium Ca=40.07	Scandium Sc=44.1	Titanium Ti=48.1	Vanadium V=51.0	Chromium Cr=52.0	Manganese Mn=54.93	Iron Fe=55.84	Nickel Ni=58.68	Cobalt Co=58.97 (Cu)
5		Copper Cu=63.6	Zinc Zn=65.37	Gallium Ga=69.9	Germanium Ge=72.5	Arsenic As=74.96	Selenium Se=79.2	Bromine Br=79.92			
6	Krypton Kr=82.92	Rubidium Rb=85.45	Strontium Sr=87.63	Yttrium Y=89.0	Zirconium Zr=90.6	Columbium Cb=93.5	Molybdenum Mo=96.0	—	Ruthenium Ru=101.7	Rhodium Rh=102.9	Palladium Pd=106.7 (Ag)
7		Silver Ag=107.88	Cadmium Cd=112.4	Indium In=114.8	Tin Sn=119.0	Antimony Sb=120.2	Tellurium Te=127.5	Iodine I=126.92			
8	Xenon Xe=130.2	Cesium Cs=132.81	Barium Ba=137.37	Lanthanum La=139	Cerium Ce=140.25	—	—		—	—	— (—)
9		—	—		—	—	—	—			
10	—	—	—	Ytterbium Yb=172	—	Tantalum Ta=181.5	Tungsten W=184.0	—	Osmium Os=190.9	Iridium Ir=193.1	Platinum Pt=195.2 (Au)
11		Gold Au=197.2	Mercury Hg=200.6	Thallium Tl=204	Lead Pb=207.1	Bismuth Bi=208	—	—			
12	—	—	Radium Rd=226.4	—	Thorium Th=232.4	—	Uranium U=238.5				

REFERENCE BOOKS.

For Microchemical Analysis and General Chemical Microscopy.

BEHRENS. — A Manual of Microchemical Analysis. MacMillan, New York, 1894.

BEHRENS. — Anleitung z. Mikrochemischen Analyse. 2 Auf. Voss, Leipzig, 1899.

BEHRENS. — Anleitung z. Mikrochemischen Analyse d. Wichtigsten organischen Verbindungen. Voss, Leipzig, 1895–97.

BEHRENS. — Mikrochemische Technik.

DONAU. — Arbeitsmethoden d. Mikrochemie. Stuttgart, 1914.

EMICH. — Lehrbuch der Mikrochemie. Bergmann, Wiesbaden, 1911.

HINRICHS. — Microchemical Analysis. St. Louis, 1904.

HUYSSE. — Atlas z. Gebrauche b. d. Mikrochemischen Analyse. Brill, Leiden, 1900.

POZZI-ESCOT. — Analyse microchimique. Masson, Paris, 1900.

SCHOORL. — Beiträge z. mikrochemischen Analyse. Kreidel, Weisbaden, 1909.

JOHANNSEN. — Manual of Petrographic Methods. McGraw-Hill, New York, 1914.

LEHMANN. — Das Kristallisationsmikroskop. Vieweg, Braunschweig, 1910.

LUQUER. — Minerals in Rock Sections. Van Nostrand, New York, 1898.

MCCAUGHEY-FRY. — The Microscopic Determination of Soil-Forming Minerals. Bureau Soils Bul. 91, Washington, 1913.

RINNE. — Anleitung z. kristallographisch-optischen Untersuchungen. Jänecke, Leipzig, 1912.

ROSENBUSCH-IDDINGS. — Microscopical Physiography of Rock-making Minerals. New York, 1908.

SCHROEDER VAN DER KOLK. — Mikroskopische Krystallbestimmung. Kreidel, Wiesbaden, 1898.

WEINSCHENK. — Anleitung z. Gebrauche d. Polarizationsmikroskop. Freiburg, 1910, 3 Auf.

WEINSCHENK-CLARK. — Petrographic Methods. McGraw-Hill, New York, 1912.

WRIGHT. — The Methods of Petrographic-Microscopic Research. Bul. 158, Carnegie Inst., Washington, 1911.

GAGE. — The Microscope. Comstock Pub. Co., Ithaca, 1908. 10 ed.

HANAUSEK-WINTON. — Microscopy of Technical Products. Wiley, New York, 1907.

MACÉ. — Les Substances Alimentaires étudiées au Microscope. Baillière, Paris, 1891.

WHIPPLE. — Microscopy of Drinking Water. Wiley, New York, 1914.
WINTON. — Microscopy of Vegetable Foods. Wiley, New York, 1906.
ZIMMERMANN-HUMPHREY. — Botanical Microtechnique. Holt, New York, 1893.

OSMOND, F. The Microscopic Analysis of Metals. Griffin, London, 1913.
ROBIN. — Traité de Métallographie. Hermann, Paris, 1912.
PREUSS. — Prüfung des Eisens. Springer, Berlin, 1913.

WORMLEY. — Microchemistry of Poisons. Blakiston, Philadelphia, 1885. 2nd ed.

INDEX.

PAGE

Abbe condenser, adjusting 33
    methods of employing 36
Aberration, chromatic 2
    spherical 2
Abrasives, abrasive papers 388
Absorption of light by crystals 176
Acetates, detection of 374
Acicular crystals 169
Acidification, methods for 254
Acids, methods of testing for 368, 369
    yielding precipitates with barium chloride 372
        no precipitates with barium chloride 372
        precipitates with silver nitrate 370, 371
        no precipitates with silver nitrate 370
    set free from salts by acetic acid 373
        sulphuric acid 373
Adsorption, tests involving 261
Æolotropic substances 159
Agate mortars 249
Air bubbles, optic behavior of 187, 188
    test for axial light 35
Alcohol, use of 257, 258
Alums 343
Aluminum, common salts 341
    detection by cesium sulphate 342
        ammonium fluoride 345, 270
Amicrons 56
Ammonium, common salts 286
    detection by chloroplatinic acid 286
        sodium phosphate 286
    mercuric sulphocyanate, preparation of 271
        as reagent 367
Amorphous precipitates, treatment of 264
Angular aperture of objectives 4
Anions, testing for 369
Anisotropic bodies 159
    crystals 171
    substances, refractive indices of 193
Analysis of simple salts 367, 369

PAGE

Analyzer . . . 162
Antimonates . . . 354
Antimony, common salts . . . 352
detection with cesium chloride . . . 352
Apochromatic objectives . . . 3
Applying reagents, methods . . . 250–272
Arc lamps, microscopic . . . 133, 134
Areas, measurements of . . . 216
Arsenates, detection of . . . 351, 374
Arsenites, detection of . . . 351, 374
Arsenic, common salts . . . 348
detection of . . . 349
as arsine . . . 349
by reduction . . . 350
Artificial daylight . . . 132
Artificially colored crystals . . . 170
Atomic weights . . . 396
Axial light, test for . . . 35

Ball-and-socket stage . . . 117
Barger method for molecular weight determination . . . 216
Barium, common salts . . . 295, 296
detection by oxalic acid . . . 298
potassium bichromate . . . 301
ferrocyanide . . . 300
sodium bicarbonate . . . 303
sulphuric acid . . . 296
Barnes pipette, bottles with . . . 121
Bead tests . . . 268
Biaxial crystals . . . 171
refractive indices of . . . 194
Bichromates, detection of . . . 376
Biltz cell . . . 60
Bisectrix . . . 173
Bismuth, common salts . . . 354
detection by cesium chloride . . . 355
oxalic acid . . . 356
potassium bichromate . . . 356
sulphate . . . 355
water . . . 355
Blast lamps, small . . . 128
Blue glass with Abbe condenser . . . 37, 132
Books, reference . . . 397, 398
Borates, detection of . . . 375
Brinell hardness testing method . . . 147
Brittle material, grinding and polishing . . . 390
Bromides, detection of . . . 375

PAGE
Brownian movement 55
Burners, micro- 127

Cadmium, common salts 316
detection by ammonium mercuric sulphocyanate 317
oxalic acid 318
sodium nitroprusside 318
Calcium, common salts 287, 288
detection by oxalic acid 291
potassium ferrocyanide 300
sodium bicarbonate 303
sulphuric acid 288
Camera lucida 102
Carbonates, detection of 375
Cardioid dark-ground illuminator 67
ultramicroscope 66, 67
Casseroles 248
Cations, testing for 367
Centering Abbe condensers 34
objectives 47, 60
stage of microscope 164
Centrifuge 233
tubes for 234-236
Cesium chloride as reagent 368
double chlorides 348
Celluloid object slides 125
Chlorates, detection of 376
Chlorides, detection of 376
Choice of abrasive wheels 386
Chromates, detection of 376
Chromium, common salts 356
detection by color of salts 356
cesium sulphate 356
in alloys 358
Circular polarization 160
Cobalt, common salts 365
cyanate 366
detection by potassium nitrite 366
sodium phosphate 367
ammonium mercuric sulphocyanate 366
Colors with Abbe condenser 37, 132
Coma 2
Compensating oculars 13
Compound microscope, optics of 1
Condensers, Abbe 32, 33, 34
Jentzsch ultra- 71
numerical apertures of 32

PAGE

Condensers, reflecting 45
Contrast micrometers 154
Converging polarized light 173
Coördinate ruled cells 210
ocular micrometers 208
object slides 210
Copper, common salts 339
detection by ammonium mercuric sulphocyanate 339
cesium chloride 341
potassium ferrocyanide 341
triple nitrite reaction 340
Cotton and Mouton ultramicroscope 69
Counting cells 210, 211
Cover glass, correction for 3
Cross-hairs, testing 163
Crossed nicols, testing for 161, 163
Crystal angles, measurement of 177
Crystals, axes of 168
faces of 168
symmetry of 168
for determination of refractive index 203
Crystallographic concepts 167
Cubic system, characteristics of 180
Cups, platinum 248
Cyanates, detection of 377
Cyanides, detection of 376

Dark-ground illumination 40–50
illuminators, adjustable 43
adjustment of 46
numerical aperture in 43
path of light rays in 41, 42, 45
thickness of object slides for 49
Decantation 230
washing precipitates by 233
Dendrites 169
Differential color illumination 51
Dimorphous crystals 169
Directions of elasticity 172
vibration 172
Disk vertical illuminators 77
Dispersive power of liquids 190
Distillation 244
apparatus 245
Distilling tubes 247, 248
Drawing cameras 102
adjustment of 104

PAGE
Drawing oculars 105
Draw tube 4

Ebonite tubes 121
Elasticity, axes of 172
Electrochemical series 253
Estimation of molecular weights 216
Etching 391
liquids 392–394
Evaporators for microchemistry 126
Experiments in crystallization 182, 183
Extinction 171
angles 170
Extraordinary ray 161
Eyepieces, compensating 13
cross-haired 163
drawing 105
goniometer 14
Huygens 11
micrometer 149, 153–155
negative 11
net ruled 208
positive 11
projection 14
Ramsden 11
Eye-point 12

Ferricyanides, detection of 377
Ferrocyanides, detection of 378
Fibers, textile, use of, in analysis 260
preparation of, as reagents 271
Files, method of using, to prepare metals for study 388
Films of material for analysis, preparation 255
Filter tubes 237, 238, 239
Filtration 236
Fluorescence microscope 51
Fluorides as reagents, precautions 268
Forceps 122, 123
Fusions 248

Gas lamps 26
Gases, testing for evolution of 263
Glass, refractive index of 200
Glass rods 121
Glycerin, use of 254
Grade of abrasive wheels 385, 386
Grain of abrasive wheels 385, 386

PAGE

Graduated circles, testing of ... 165
Grinding material for analysis ... 249
opaque objects for microscopic study ... 383-391
wheels ... 384, 385, 386
Ground glass with Abbe condenser ... 36
loss of light in using ... 136

Habit of crystals ... 170
Half-shadow illumination ... 189
Hemihedral crystals ... 169
Hemimorphic crystals ... 169
Hemispheres for orientation ... 115, 116, 117
Hexagonal system, characteristics of ... 181
Holohedral crystals ... 169
Hot stages ... 222, 223, 224
Hydrofluoric acid as a reagent ... 121, 268

Idiomorphic crystals ... 169
Ignition ... 248
Illumination ... 30-53
dark-ground ... 40
differential color ... 51
orthogonal ... 50, 61
reflected light ... 37-39
transmitted light ... 30, 31
ultraviolet ray ... 51
Illuminators, vertical ... 76
Immersion, method of refractive index determination ... 184-196
method, liquids for ... 201, 202
objectives ... 5
ultramicroscope ... 72
Interfacial angles ... 168
Interference colors ... 174
figures ... 173
Interpretation of appearances with transmitted light ... 31
reflected light ... 38
Iodates, detection of ... 378
Iodides, detection of ... 378
Iron, common salts ... 362
detection by oxalic acid and barium salts ... 209
potassium ferrocyanide ... 362
sulphocyanates ... 310
Isometric system, characteristics of ... 180
Isotropic bodies ... 159
crystals ... 171
refractive index of ... 185

Kryptokinetic motion ... 55

PAGE

Lead, common salts . . . 323
detection by hydrochloric acid . . . 325
metallic zinc . . . 329
potassium iodide . . . 323
triple nitrite reaction . . . 327
Leitz metallurgical microscopes . . . 91, 100
Lens holders . . . 118
paper . . . 9
Light grasping power of objectives . . . 5, 8
Liquids for determination of refractive index . . . 201, 202
determination of refractive index of . . . 196
Litmus-silk fibers . . . 271
Luminescence microscope . . . 51

Magnesium, common salts . . . 304
detection by sodium phosphate . . . 305
uranyl acetate . . . 275
Magnification, limit of . . . 15
determination of . . . 148
Manganese, common salts . . . 359
detection by chromates . . . 360
fusion . . . 361
sodium bismuthate . . . 361
sodium phosphate . . . 361
oxalate . . . 359
Mazda lamps for microscopy . . . 136
Measurement of areas . . . 216
Measurements, microscopic . . . 142
of thickness . . . 209
volumes . . . 216
Mechanical stages . . . 113
testing graduations . . . 114
Melting points, determination of . . . 220
table of . . . 395
Mercury, common salts . . . 318
detection by ammonium sulphocyanate . . . 322
potassium iodide . . . 321
sublimation . . . 319
determination of . . . 214
Mercuric and mercurous compounds, differentiating . . . 320
Metallurgical microscopes . . . 90
Metals, grinding, polishing and etching . . . 383
Microburners . . . 127
Microchemical methods . . . 228, 250
Micrometers, contrast . . . 154
filar . . . 154, 155
step . . . 153

PAGE

Micrometry 142
  by means of camera lucida 147
    fine adjustment 157
    ocular micrometer 149
    projected scale from Abbe condenser 155
Micrometer scales, adjustment of 151, 152, 153
Micrometric microscopes 144, 145, 146
Microscopes, chemical 17, 19
    specifications for 17, 18, 19
  compound, optics of 1
  comparison 23, 26, 27
  fluorescence 51
  hot stage 29
  large stage 22
  metallurgical 90
  as polarimeters 140
Microspectroscopes 106
    adjustment and calibration 110, 111, 112
Micellæ 56
Monoclinic system, characteristics of 181
Mortars, agate 249
Mounting opaque objects for study 89

Nernst lamps for microscopy 135
Neutralization 254
Nickel, common salts 363
  detection by glyoxime 363
    phosphate 365
    triple nitrite reaction 365
Nicol prism 160
Nitrates, detection of 378
Nitrites, detection of 379
Nosepieces 137

Object slides 123
  for use with fluorides 125
Objective changers 137
Objectives, achromatic 2, 3
  adjustable 3
  angular aperture of 4
  aplanatic 2
  care of 9
  designation of 1
  for dark-ground illumination 44
  function of 1
  illuminating power of 8
  immersion 5

PAGE
Objectives, light grasping power of 5, 8
numerical aperture of 5
penetrating power of 7, 8
photographic 9
selection of 8
variable 6
vertical illuminator 79
Oblique extinction 171
illumination with Abbe condenser 31, 33
in refractive index determinations 189
Ocular micrometer ratio 151
Oculars, care of 14
comparison 24
compensating 13
cross-haired 163
goniometer 14
Huygens 11
micrometer 149, 153-155
negative 11
net ruled 208
par focal 13
projection 14
positive 11
Ramsden 11
Oil globules, optic behavior of 187
Optic axes of crystals 171
Optics of compound microscope 1
Ordinary ray 160
Orientating devices 115
Orthogonal illumination 50
Orthorhombic system, characteristics of 181
Oxalate, potassium, as reagent 368
Oxalates, detection of 379

Parallel extinction 171
Paraboloid dark-ground illumination 47
Penetrating power of objectives 7, 8
Periodic system of Mendelejeff 396
Phosphates, detection of 380
Platinum cups 248
wires 121
Pleochroism 176
Polarizer 162
Polarization colors 174
by reflection 166
tube 139
Polarized light 159

PAGE

Polishing ... 384
Polymorphous crystals ... 169
Potassium, common salts ... 281
  detection by chloroplatinic acid ... 281
    perchloric acid ... 284
Prism vertical illuminators ... 77
Pseudomorphs ... 169

Quantitative microscopic analysis ... 205, 214, 215
Quartz object slides ... 124
Quartz, refractive index of ... 200

Radiants for microscopic illumination ... 132-137
Reagent cases ... 120
  containers ... 110, 121
Reagents, methods of applying ... 250-272
Reference books ... 397, 398
Reflected light illumination ... 37
Refractive index, determination of ... 184
  liquids for ... 190
  calculation of, for liquid mixtures ... 191
  biaxial crystals ... 194
  uniaxial crystals ... 194
  of typical crystals ... 204
Reichert metallurgical microscope ... 94
Resolving power of objectives ... 6, 7, 8
  with dark-ground illuminators ... 44
Rotating apparatus ... 115

Sedimentation glasses ... 88, 236
Sedgwick-Rafter counting cell ... 211
Selenite plate ... 174
Shop microscopes ... 99
Silver, common salts ... 330
  detection by arsenic acid ... 337
    bichromates ... 334
    hydrochloric acid ... 331
Silicates, detection of ... 380
Skeleton crystals ... 170
Slit ultramicroscope ... 57
  path of rays in cell of ... 61
Sodium, common salts ... 273
  detection by bismuth sulphate ... 276
    silicofluorides ... 278
    uranyl acetate ... 274
Soft metals, preparing for study ... 390
Solubility, testing for ... 228
Spatulas for chemical microscopy ... 122

PAGE

Sphero-crystals 169
Spherulites 169
Spectroscopic ocular 100
Stage, attachable mechanical 113
method of centering 164
Step micrometer 153
Strontium, common salts 292, 293
detection by bichromates 302
oxalic acid 295
sodium bicarbonate 303
sulphuric acid 293
Sublimation 240
Subliming cell 243
point determinations 220
Sulphates, detection of 380
Sulphides, detection of 381
Sulphites, detection of 381
Sulphocyanates, detection of 381
Sulphuric acid, reagent in qualitative analysis 367
Supports for objects 123
Symmetrical extinction 171

Tables for microscopic work 129
Tartrates, detection of 381
Testing graduated stages 165
polarizers and analyzers 165
Tetragonal system, characteristics of 181
Thickness, measurement of 200
Thomae cell 60
Thiosulphates, detection of 381
Tin, common salts 346
detection by cesium chloride 347
Tongs 129
Trichites 169
Triclinic system, characteristics of 182
Trimorphous crystals 169
Tungsten lamps for microscopy 136
Turmeric-linen or -silk fibers 271

Ultracondenser, Jentzsch 71
reflecting 65
Ultramicrons 56
Ultramicroscopes 54, 57, 66, 67, 69, 72
Ultramicroscopic studies, preparing solids for 63
Ultraviolet ray illumination 51
Uniaxial crystals 171, 194

Vapors, tests involving 266
Velocity of abrasive wheels 387

PAGE

Vertical illumination, appearances in ... 38, 39, 80
Vertical illuminators ... 76
adjustment of ... 78, 88
auxiliary stage with ... 88
disk ... 77
lamp for use with ... 87
Leitz ... 82
Nachet ... 81
objectives for use with ... 79
polarized light with ... 81
prism ... 77
stand for use with ... 84
Tassin ... 84

Watch glasses ... 126
Weight, determination of ... 213
Work tables ... 129–131
Working distance ... 2
Works microscopes ... 99

Zinc, common salts ... 307
detection by ammonium mercuric sulphocyanate ... 307
oxalic acid ... 311
sodium bicarbonate ... 311
nitroprusside ... 315
sulphide fibers, preparation of ... 272
as reagent ... 368